ENVISION™

CONSOLE

Geothermal/Water Source Heat Pumps

- R-410A Refrigerant
- 0.75-1.5 Ton Single Speed

Envision Console Installation Manual

Installation Information

Water Piping Connections

Electrical

Startup Procedures

Troubleshooting

Preventive Maintenance

ARI PERFORMANCE CERTIFIED ARI Standard 13256-1

ETL LISTED

WaterFurnace® Smarter from the Ground Up™

IM1609 10/08

Table of Contents

Model Nomenclature 3
General Installation Information 4
Dimensional Data 5-11
Installation Steps 12-15
System Cleaning and Flushing 16
Open Loop Ground Water Systems 17
Electrical Connections 18
Auxiliary Heat Ratings 18
Unit Electrical Data 19
Fan Performance Table 19
Wiring Schematics 20-24
Envision Console Controls 25-39
Unit Startup Notes 40
Unit Startup Checklist/Unit Startup Steps 41
Unit Operating Parameters 42
Unit Operating Limits 42
Startup/Troubleshooting Form 43
Pressure Drop 44
Preventive Maintenance 45
Replacement Procedures 45

ENVISION™
CONSOLES

Model Nomenclature

1-2	3	4-5	6	7	8	9	10	11	12	13	14	15-16	17
NC	C	09	L	0	1	1	C	N	N	A	1	SS	A

Family
NC = Envision Console

Cabinet Configuration
C = Chassis Only
W = Chassis with Cabinet
S = Chassis with Slope Top
E = Chassis with Extended Slope Top

Unit Capacity
MBTUH @ 86 °F EWT
09, 12, 15, 18

Piping Option
L = Left
R= Right (N/A with chassis only)

Voltage
0 = 208-230/60/1
2 = 265/60/1

Unit Control
1 = CCM
2 = Versatec
4 = FX10 std. no communication - (only w/ t-stat control option 2)
5 = FX10 w/Open N2 Com Card - (only w/ t-stat control option 2)
6 = FX10 w/Lonworks Com Card - (only w/ t-stat control option 2)
7 = FX10 w/BacNet Com Card - (only w/ t-stat control option 2)

Thermostat Control
1 = Unit mounted t-stat
2 = Remote wall-mounted t-stat

Vintage
A = Current

Non-Standard Option Details
SS = Standard Option

Air Coil / Insulation Options
1 = Formishield / Extended Range
2 = Formishield / Standard Range
3 = No Coating / Extended Range
4 = No Coating / Standard Range

Sound Kit
A = None
B = Blanket

Auxilliary Electric heat
N = None
C = 2.0 kW (09-12)*
D = 3.0 kW (15-18)*

Motorized Oustide Air Damper (Field Installed)
N = None
M = Motorized Damper

Coax Options
C = Copper
N = Cupronickel

General Installation Information

Safety Considerations

WARNING: Before performing service or maintenance operations on a system, turn off main power switches to the indoor unit. If applicable, turn off the accessory heater power switch. Electrical shock could cause personal injury.

Installing and servicing heating and air conditioning equipment can be hazardous due to system pressure and electrical components. Only trained and qualified service personnel should install, repair or service heating and air conditioning equipment. Untrained personnel can perform the basic maintenance functions of cleaning coils and cleaning and replacing filters. All other operations should be performed by trained service personnel. When working on heating and air conditioning equipment, observe precautions in the literature, tags and labels attached to the unit and other safety precautions that may apply.

Follow all safety codes. Wear safety glasses and work gloves. Use a quenching cloth for brazing operations and have a fire extinguisher available.

Moving and Storage

Move units in the normal “up” orientation. Do not stack units. When the equipment is received, all items should be carefully checked against the bill of lading to be sure all crates and cartons have been received. Examine units for shipping damage, removing the units from the packaging if necessary. Units in question should also be internally inspected. If any damage is noted, the carrier should make the proper notation on the delivery receipt, acknowledging the damage.

Water Piping

The proper water flow must be provided to each unit whenever the unit operates. To assure proper flow, use pressure/temperature ports to determine the flow rate. These ports should be located at the supply and return water connections on the unit. The proper flow rate cannot be accurately set without measuring the water pressure drop through the refrigerant-to-water heat exchanger.

All source water connections on commercial units are fittings that accept a male pipe thread (MPT). Insert the connectors by hand, then tighten the fitting with a wrench to provide a leakproof joint. When connecting to an open loop (groundwater) system, thread any copper MPT fitting into the connector and tighten in the same manner as described above.

Refrigerant Systems

To maintain sealed circuit integrity, do not install service gauges unless unit opertion appears abnormal. Compare the change in temperature on the air side as well as the water side to the Unit Operating Parameters tables. If the unit’s performance is not within the ranges listed, and the airflow and water flow are known to be correct, gauges should then be installed and superheat and subcooling numbers calculated. If superheat and subcooling are outside recommended ranges, an adjustment to therefrigerant charge may be necessary.

Dimensional Data - Flat Top Cabinet

NCW09-18

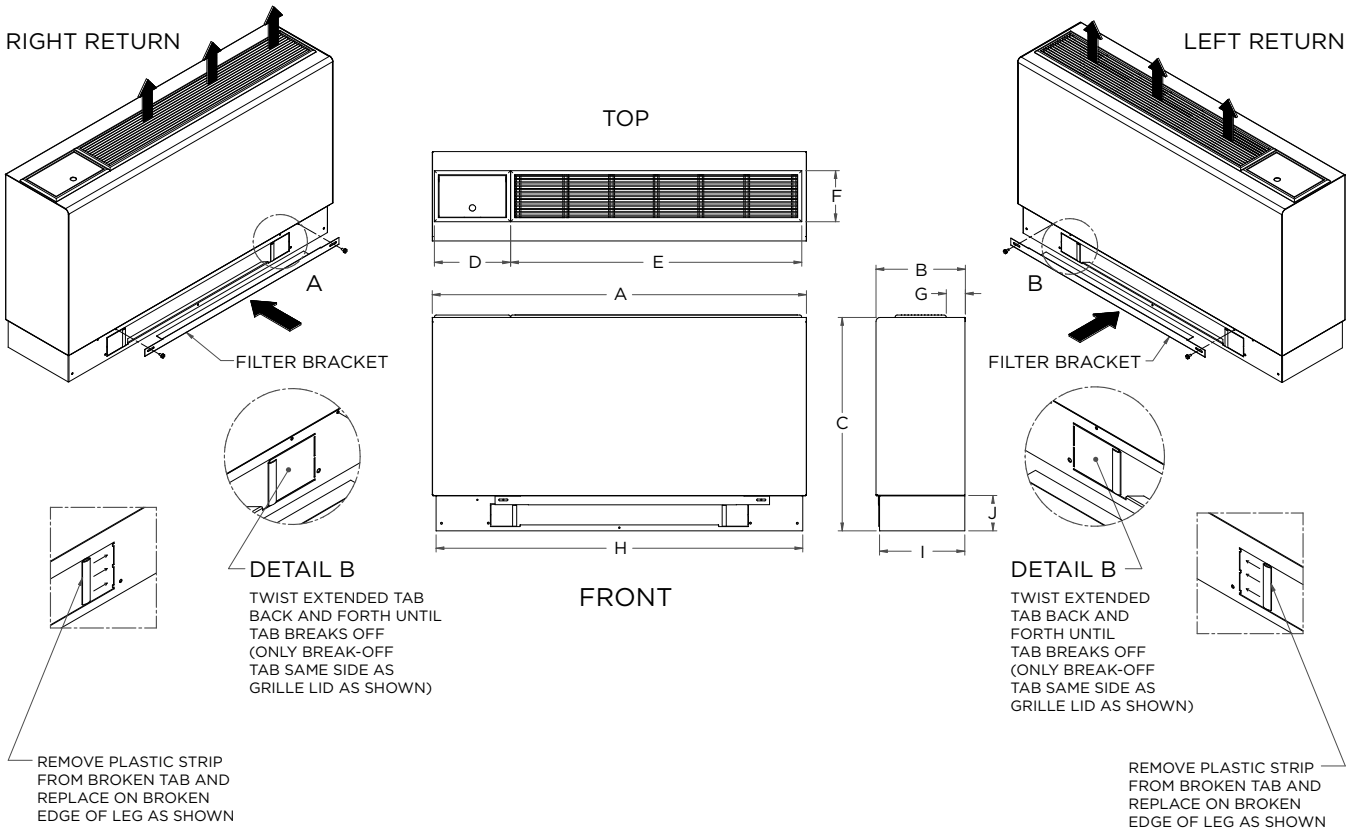

Flat Top Configuration		Overall Cabinet									
		A	B	C	D	E	F	G	H	I	J
		Width	Depth	Height	Grille Lid	Grille Length	Grille Width				
09-12	in.	45.0	10.8	25.7	9.2	35.0	6.1	2.3	44.1	10.3	4.3
	cm.	114.3	27.3	65.2	23.4	88.9	15.6	5.8	112.0	26.0	10.9
15-18	in.	50.0	12.3	25.7	9.2	35.0	6.1	3.3	49.1	11.8	4.3
	cm.	127.0	31.1	65.2	23.4	88.9	15.6	8.3	124.7	29.8	10.9

Dimensional Data - Slope Top Cabinet

NCS09-18

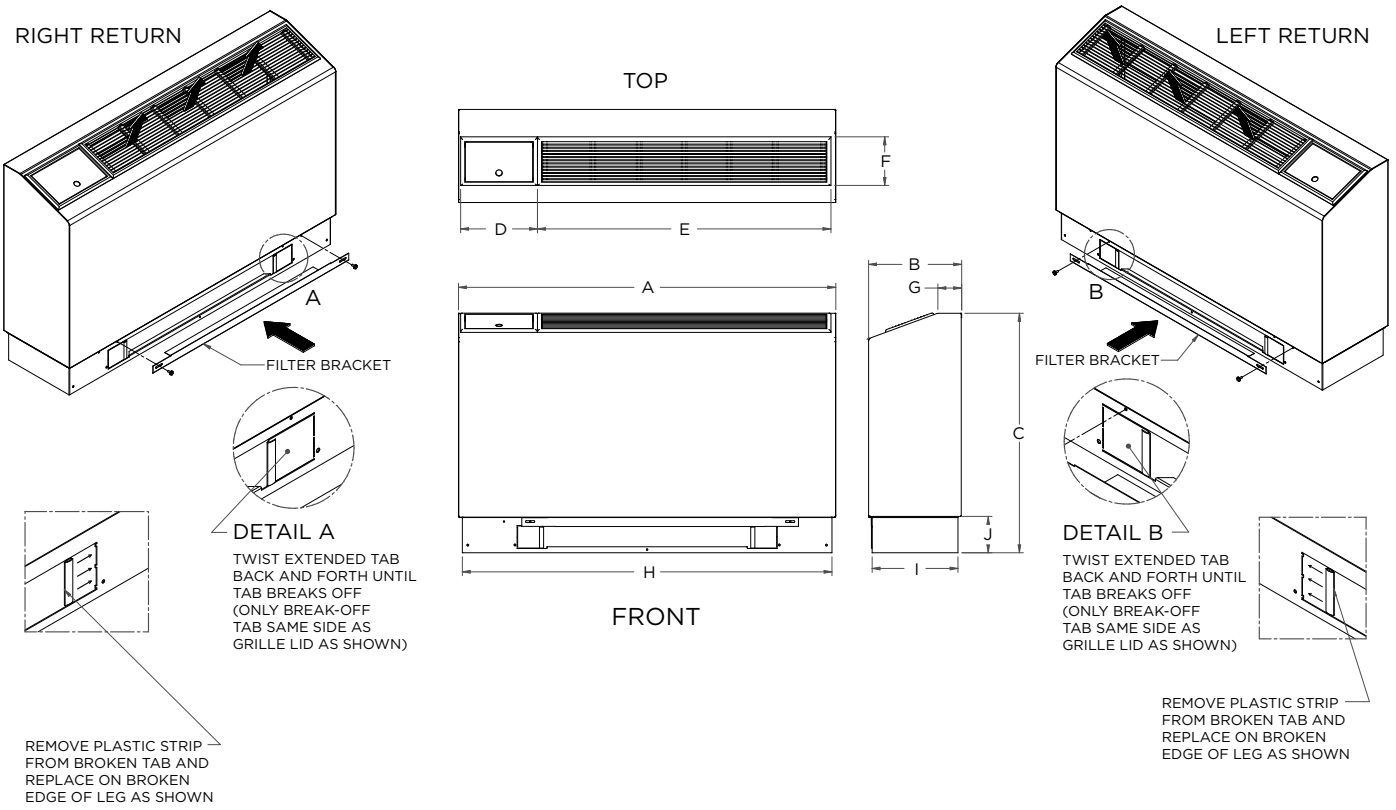

Slope Top Configuration		Overall Cabinet									
		A	B	C	D	E	F	G	H	I	J
		Width	Depth	Height	Grille Lid	Grille Length	Grille Width				
09-12	in.	45.0	11.1	28.6	9.2	35.0	6.1	2.8	44.1	10.3	4.3
	cm.	114.3	28.2	72.6	23.4	88.9	15.6	7.2	112.0	26.0	10.9
15-18	in.	50.0	12.6	29.1	9.2	35.0	6.1	2.5	49.1	11.8	4.3
	cm.	127.0	32.0	73.9	23.4	88.9	15.6	6.4	124.7	29.8	10.9

Dimensional Data - Extended Slope Top Cabinet

NCE09-18

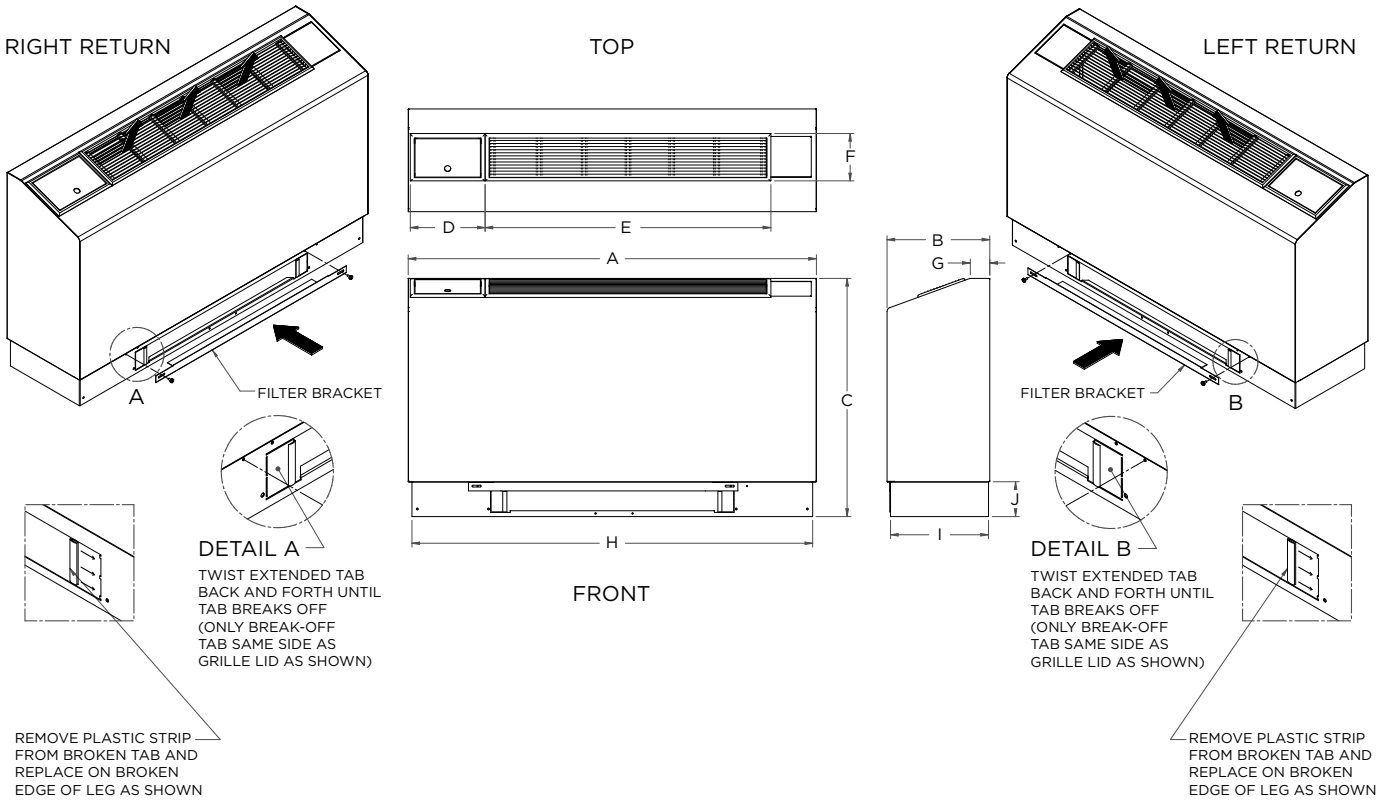

Ext. Slope Top Configuration		Overall Cabinet									
		A	B	C	D	E	F	G	H	I	J
		Width	Depth	Height	Grille Lid	Grille Length	Grille Width				
09-12	in.	50.0	12.6	29.1	9.2	35.0	6.1	2.4	49.1	12.0	4.3
	cm.	127.0	32.0	73.9	23.4	88.9	15.6	6.1	124.7	30.5	10.9
15-18	in.	55.0	12.6	29.1	9.2	35.0	6.1	2.5	54.1	11.8	4.3
	cm.	139.7	32.0	73.9	23.4	88.9	15.6	6.4	137.4	29.8	10.9

Dimensional Data - Right Return Controls Detail

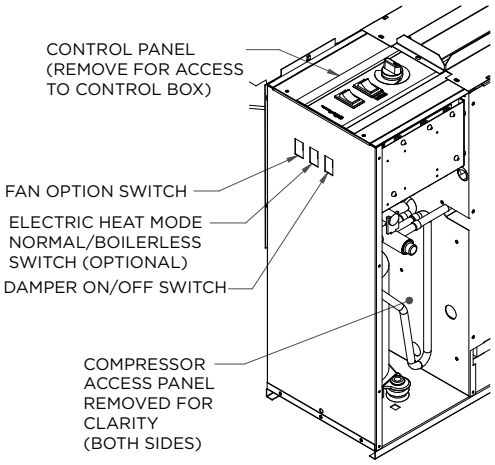

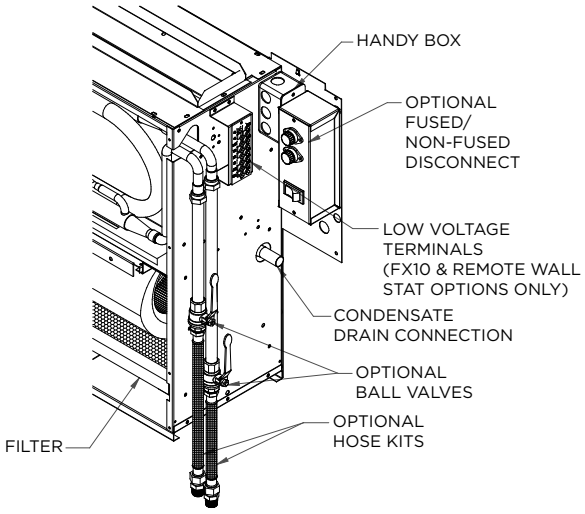

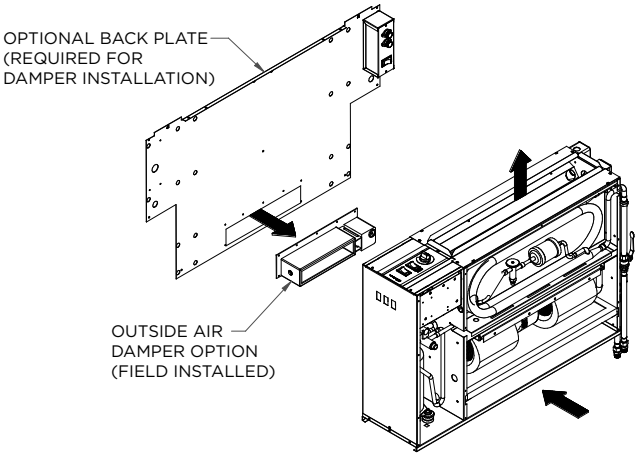

Dimensional Data - Right Return Chassis

Data = inches (cm)

NC09-12

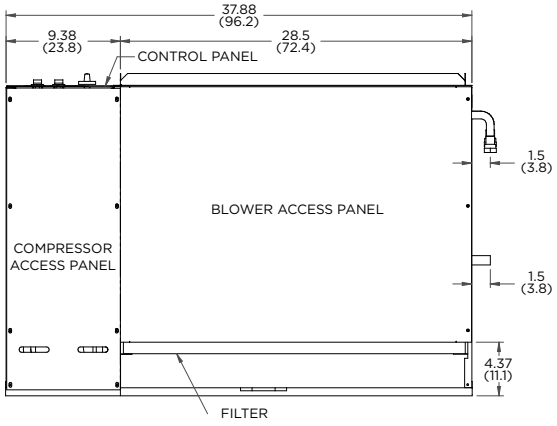

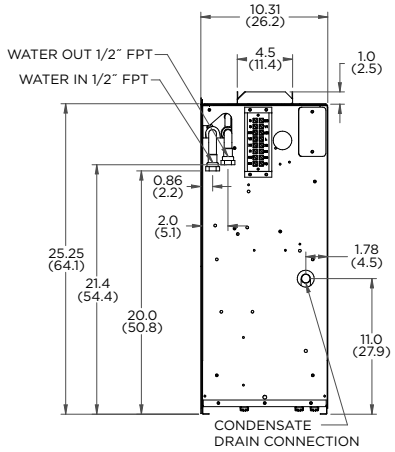

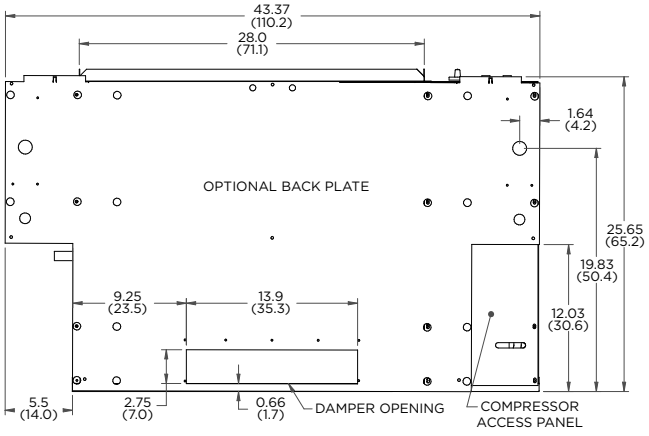

NC15-18

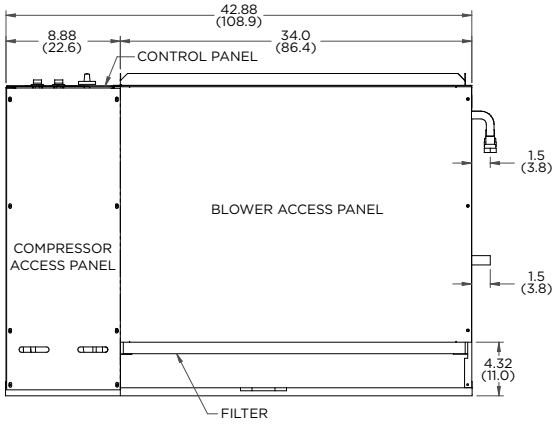

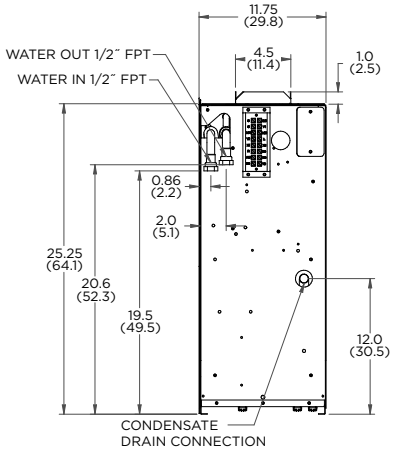

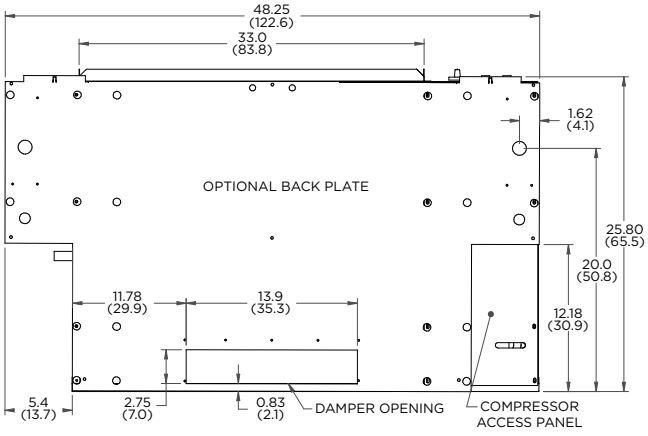

Dimensional Data - Left Return Controls Detail

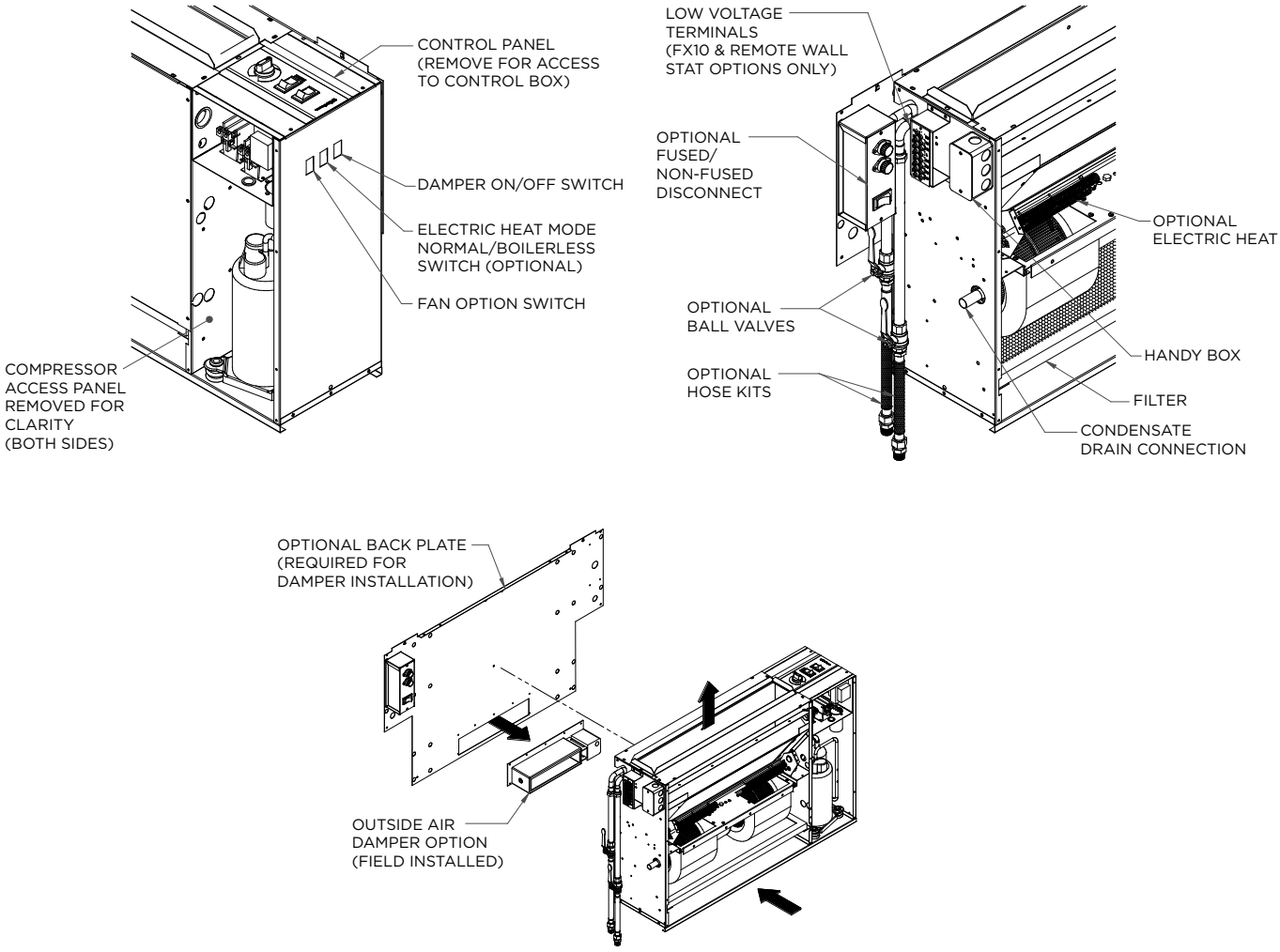

Dimensional Data - Left Return Chassis

Data = inches (cm)

NC09-12

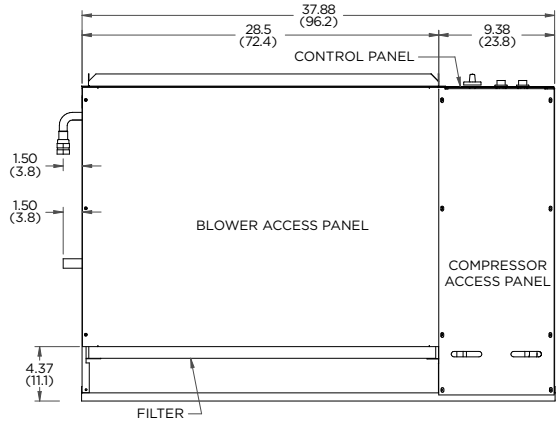

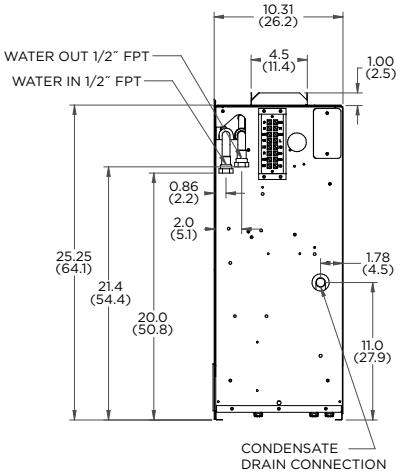

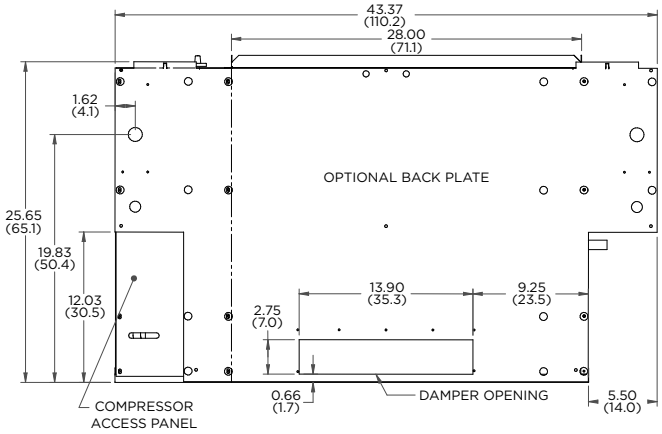

NC15-18

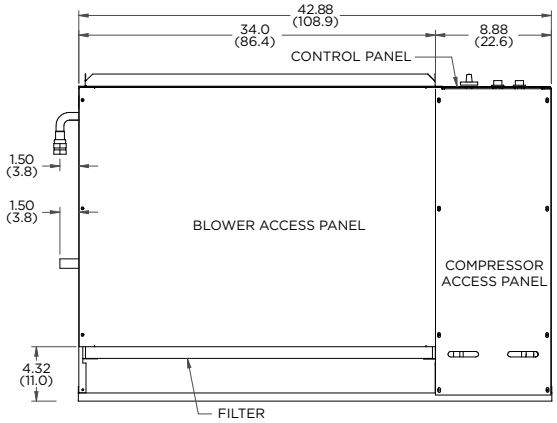

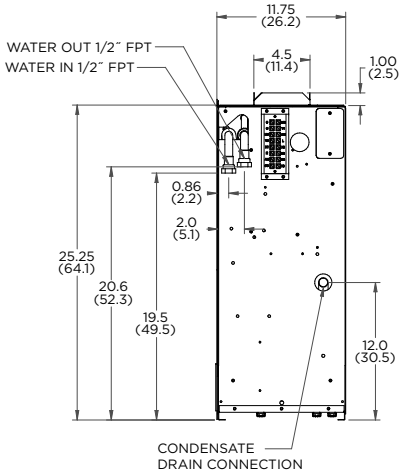

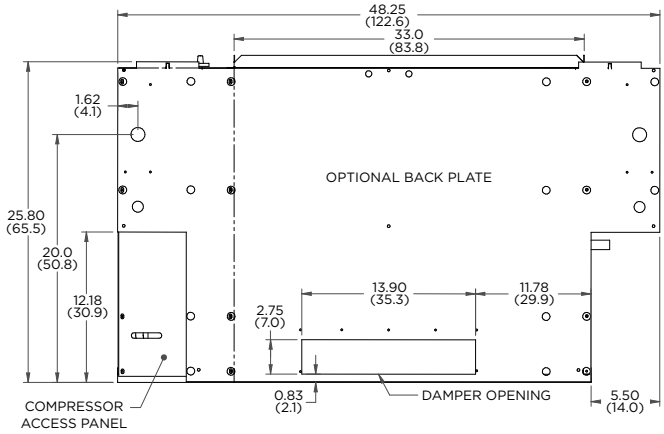

Installation Steps

Step 1: Unpack Equipment and Inspect for Damage

Step 2: Determine Equipment Location

- Choose level flooring surface (Correctable with shims. Do not pitch towards drain.)
- Location of wall support and fasteners required to secure chassis backplate.
- Easy access for both installation and service.
- Consider availability and ease of wiring, water piping and condensate drain.
- No obstructions to block airflow in front of the unit.

Step 3: Mark Unit Position

- Ensure that floor is level. If shims are required, make sure that the entire compressor compartment area is uniformly shimmed and that the backplate mounting height is increased by the thickness of the shims used.
- Position backplate in desired equipment location. To further reduce the operating sound level of the unit, 1/8-inch thick rubber matting may be placed under the chassis to eliminate vibration on hard flooring surfaces. (Make sure back plate is level).
- Mark and cut floor or wall penetrations for electrical wiring, water and condensate piping.

Optional Electrical Disconnect and Motorized Outside Air Damper

- Mark and cut wall penetrations for field fabricated outside air duct sleeve.
- Align mounting holes with backplate and attach with screws supplied.

Figure 1

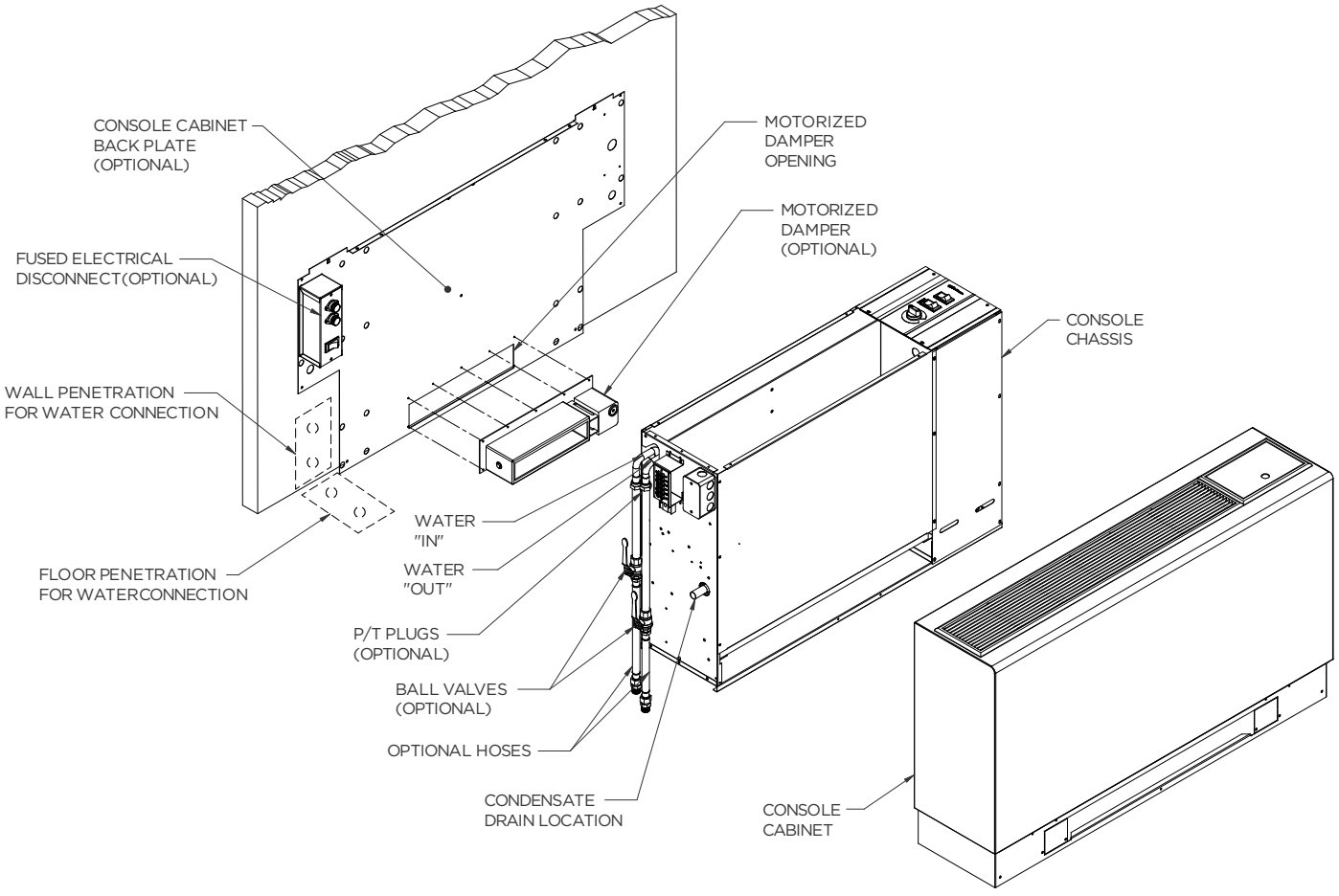

Installation Steps (cont.)

Step 4: Provide Water and Condensate Drain Connections

- A two-pipe reverse return piping configuration is recommended as it equalizes the piping circuit lengths and delivers even water flow to each unit. A direct return piping configuration may be used, but it may be difficult to achieve and maintain proper water flow to the units.
- An air vent must be installed in the water distribution system.
- The supply and return water piping should be run through the wall or floor penetration and terminate with a ball valve. The piping material used must comply with all local codes.
- Refer to: ***System Cleaning and Flushing procedures***.

Pipe Locations

Figure 2

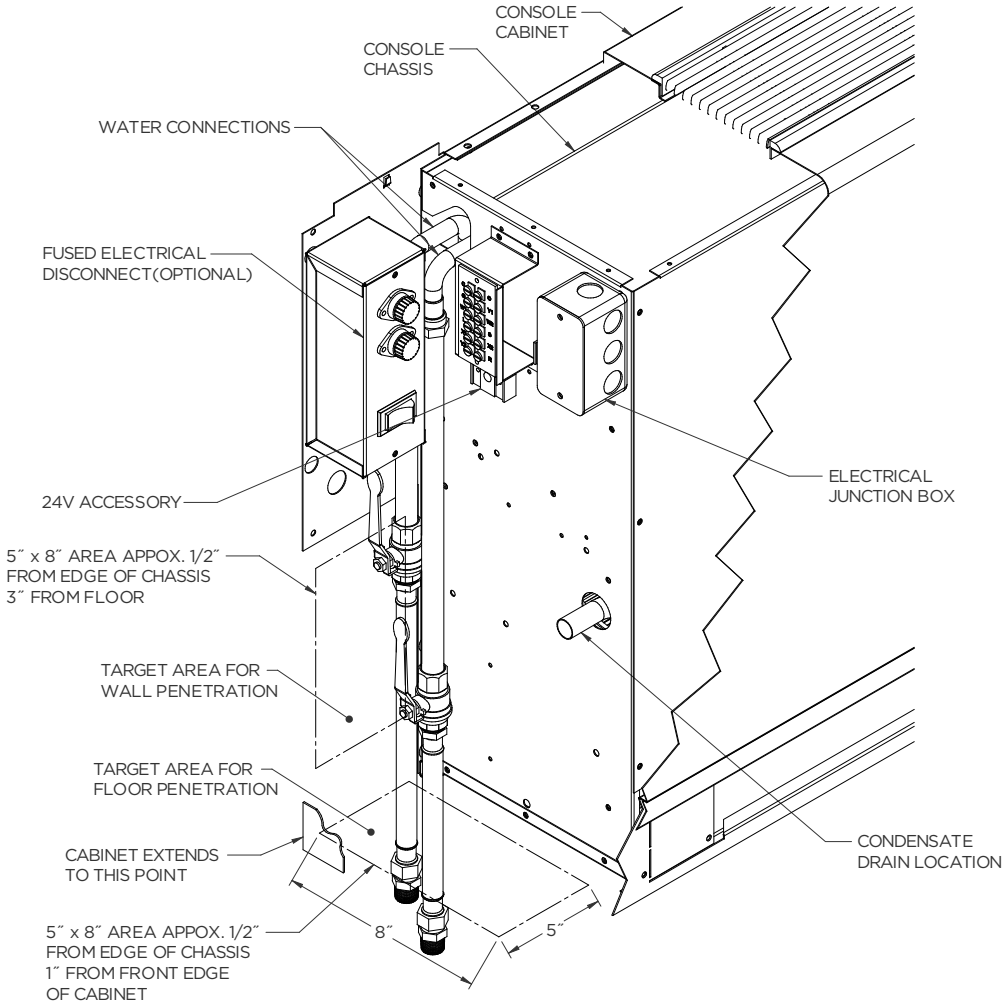

Installation Steps (cont.)

Step 5: Provide Line Voltage Wiring

- Check unit data plate located on control side of chassis for ampacity and fuse size.
- Remove electrical knockouts from chassis backplate.
- Run line voltage wiring through knockout and secure wiring to backplate or disconnect.

Step 6: Chassis Installation

- Level and secure backplate to wall.
- Position the chassis against back plate. Drive (2) screws through holes in lip of backplate into top flange of chassis.

Step 7: Final Electrical Connection

- Install flexible electrical conduit between the backplate or electrical disconnect and the unit mounted junction box.
- Make final wiring connections in disconnect and junction box, taking care to replace all covers when done. Wiring must conform to NEC and/or all local codes. ***Refer to Electrical Data.***

NOTE: It is necessary to make final wiring connections prior to securing unit chassis to back plate on right-hand piping models with electrical disconnect.

Step 8: Final Water Connection

- For ease of installation and sound attenuation, high pressure (recommended) flexible hoses with a swivel fitting should be provided. Apply Teflon® tape or sealant compound to threaded hose fittings.
- Combination shut-off/balancing valves should be installed on both the supply and return water lines of the unit.
- Flow control valves should be installed on the water discharge line.
- It is recommended that P/T ports be installed on the supply and return water lines.

Step 9: Set Unit Controls

- Locate the “continuous fan/cycle fan” switch within the electrical compartment of the chassis and set to desired position. (Remote wall thermostat units do not use this optional switch.)
- Optional Control Settings-
  Remote Thermostat - Run low voltage wiring from unit to the desired thermostat location.
  Mount and wire thermostat according to manufacturer’s recommendations.
  Motorized Outside Air Damper - Locate the “damper on/damper off” damper switch within the electrical compartment of the chassis and set to desired position.
  Emergency Electrical Heat - Locate the “electric heat/normal/boilerless” control switch within the electrical compartment of the chassis and set to desired position.

Step 10: Secure the Cabinet Cover

- Position and lower cabinet over unit chassis. Apply pressure to the front of the cabinet to ensure that the back lip of the cabinet hooks over the tabs provided on the backplate.
- Secure cabinet to chassis with mounting screws provided.

Step 11: Perform Final Unit Check

- Measure the pressure drop across the water coil and monitor water or air temperatures in both heating and cooling modes. The measured values should fall within the acceptable ranges shown in the ***Startup Performance table***.

Installation Steps (cont.)

Field Converting Console

Chassis is normally configured with controls on right end and piping on left end (see Figure 3 top view). In this position panel number 1 would be positioned against wall or back plate. Unit may also be turned 180° against wall or back plate. In this position controls will be on left end and piping on right end panel number 2 would be positioned against wall or back plate. Chassis must be enclosed with an approved cabinet enclosure.

Figure 3

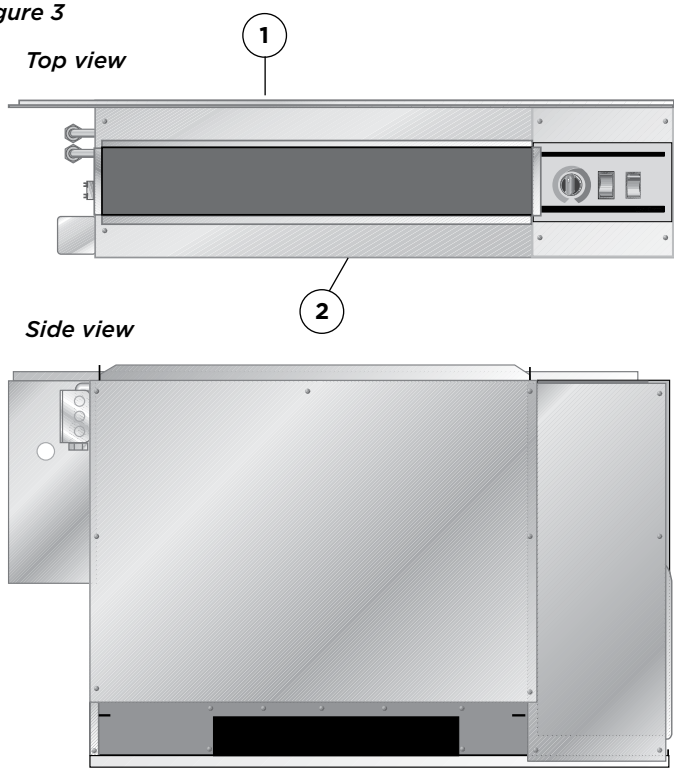

1. Remove 4 screws from front kick panel on cabinet.
2. Remove cabinet from chassis by lifting and sliding cabinet straight up.
3. Remove grille assembly from cabinet by removing 4 screws from brackets located on the bottom of the grille and door assemblies.
4. Replace grille/door assemblies into cabinet repositioning pieces 1, 2, and 3 into the locations directly opposite the original positions. Secure by replacing mounting brackets. (Note: Be sure that louvers on the grille assembly are facing the proper direction when replacing the grille section.)
5. Replace grille/frame assembly into cabinet, and secure by replacing mounting brackets.
6. Replace cabinet by sliding it down over the top of the chassis.
7. Remove tab on leg that extends into return air opening. When the grille side of the cabinet is flat against chassis there will be 4 holes that line up in the leg section. Only use 1 hole for alignment for opposite side of grille. (Note: The tab can be removed by twisting back and forth until it breaks off.)
8. Remove plastic strip from tab and replace on rough edge that the tab was removed from.
9. Replace screws in font kick panel to secure cabinet to chassis.
10. Mount filter bracket in designated opening area. (Note: The filter bracket will only fit in one direction if cabinet is installed properly.)

Figure 4

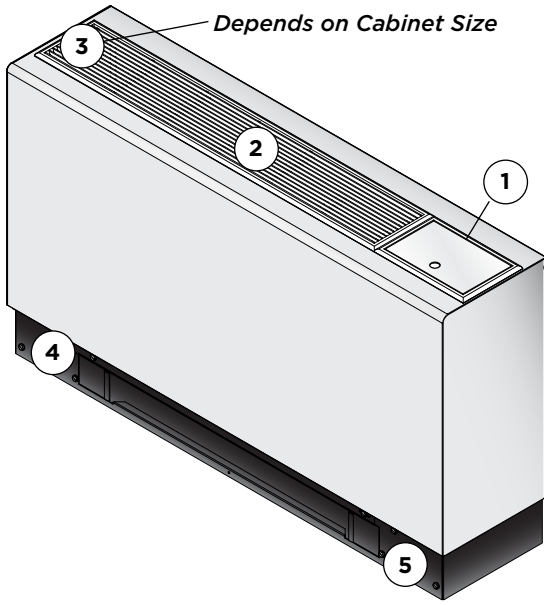

System Cleaning and Flushing

Cleaning and Flushing

Prior to start up of any heat pump, the water circulating system must be cleaned and flushed of all dirt and debris.

If the system is equipped with water shutoff valves, the supply and return runouts must be connected together at each unit location (This will prevent the introduction of dirt into the unit, see Figure 7). The system should be filled at the water make-up connection with all air vents open. After filling, vents should be closed.

Figure 7: Flushing with Water Shutoff Valve Equipped Systems

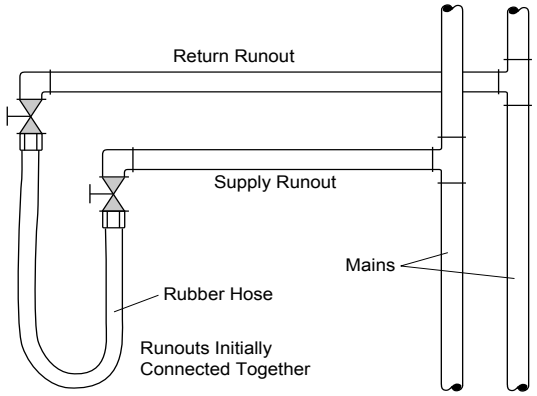

The contractor should start the main circulator with the pressure reducing valve makeup open. Vents should be checked in sequence to bleed off any trapped air and to verify circulation through all components of the system.

As water circulates through the system, the contractor should check and repair any leaks found in the piping system. Drain(s) at the lowest point(s) in the system should be opened for initial flush and blowdown, making sure water fill valves are set at the same rate. Check the pressure gauge at the pump suction and manually adjust the make-up water valve to hold the same positive pressure both before and after opening the drain valves. Flushing should continue for at least two hours, or longer if required, until drain water is clean and clear.

The supplemental heater and/or circulator pump, if used, should be shut off. All drains and vents should be opened to completely drain the system. Short-circuited supply and return runouts should now be connected to the unit supply and return connections.

Refill the system with clean water. Test the system water for acidity and treat as required to leave the water slightly alkaline (pH 7.5 to 8.5). The specified percentage of antifreeze may also be added at this time. Use commercial grade antifreeze designed for HVAC systems only. Environol™ brand antifreeze is recommended..

Once the system has been filled with clean water and antifreeze (if used), precautions should be taken to protect the system from dirty water conditions. Dirty water will result in system-wide degradation of performance, and solids may clog valves, strainers, flow regulators, etc. Additionally, the heat exchanger may become clogged which reduces compressor service life and can cause premature unit failure.

In boiler/tower application, set the loop control panel set points to desired temperatures. Supply power to all motors and start the circulating pumps. After full flow has been established through all components including the heat rejector (regardless of season), air vented and loop temperatures stabilized, each of the units will be ready for check, test and start up and for air and water balancing.

Ground Source Loop System Checkout

Once piping is completed between the unit pumping system and ground loop, final purging and charging of the loop is needed. A high pressure pump is needed to achieve adequate flow velocity in the loop to purge air and dirt particles from the loop itself. Antifreeze solution is used in most areas to prevent freezing. Flush the system adequately to remove as much air as possible; then pressurize the loop to a static pressure of 40-50 PSI (summer) or 50-75 PSI (winter). This is normally adequate for good system operation. Loop static pressure may decrease soon after initial installation, due to pipe expansion and loop temperature change. Running the unit for at least 30 minutes after the system has been completely purged of air will allow for the “break-in” period. It may be necessary to adjust static loop pressure (by adding water) after the unit has run for the first time. Loop static pressure will also fluctuate with the seasons. Pressures will be higher in the winter months than during the cooling season. This fluctuation is normal and should be considered when charging the system initially.

Insure the pump provides adequate flow through the unit by checking pressure drop across the heat exchanger. Usually 2.25-3.0 GPM of flow per ton of cooling capacity is recommended in earth loop applications.

Open Loop Ground Water Systems

Always maintain water pressure in the heat exchanger by placing water control valves at the outlet of the unit to prevent mineral precipitation. Use a closed, bladder-type expansion tank to minimize mineral formation due to air exposure. Insure proper water flow through the unit by checking pressure drop across the heat exchanger and comparing it to the figures in unit capacity data tables in the specification catalog. 1.5-2 GPM of flow per ton of cooling capacity is recommended in open loop applications.

Discharge water from the unit is not contaminated in any manner and can be disposed of in various ways, depending on local codes, i.e. recharge well, storm sewer, drain field, adjacent stream or pond, etc. Most local codes forbid the use of sanitary sewer for disposal. Consult your local building and zoning departments to assure compliance in your area.

Note: For open loop/groundwater systems or systems that do not contain an antifreeze solution, set SW1-Switch #2 to the "WELL" position (Refer to the Dip Switch Field Selection table). Slow opening/closing solenoid valves (type VM) are recommended to eliminate water hammer.

Water Quality

In ground water situations where scaling could be heavy or where biological growth such as iron bacteria will be present, a closed loop system is recommended. The heat exchanger coils in ground water systems may, over a period of time, lose heat exchange capabilities due to a buildup of mineral deposits inside. These can be cleaned, but only by a qualified service mechanic, as special solutions and pumping equipment are required. Desuperheater coils can likewise become scaled and possibly plugged. In areas with extremely hard water, the owner should be informed that the heat exchanger may require occasional flushing.

Units with cupronickel heat exchangers are recommended for open loop applications due to the increased resistance to build-up and corrosion, along with reduced wear caused by acid cleaning.

Material		Copper	90/10 Cupro-Nickel
pH	Acidity/Alkalinity	7- 9	5 - 9
Scaling	Calcium and Magnesium Carbonate	(Total Hardness) less than 350 ppm	(Total Hardness) less than 350 ppm
Corrosion	Hydrogen Sulfide	Less than .5 ppm (rotten egg smell appears at 0.5 PPM)	10 - 50 ppm
	Sulfates	Less than 125 ppm	Less than 125 ppm
	Chlorine	Less than .5 ppm	Less than .5 ppm
	Chlorides	Less than 20 ppm	Less than125 ppm
	Carbon Dioxide	Less than 50 ppm	10 - 50 ppm
	Ammonia	Less than 2 ppm	Less than 2 ppm
	Ammonia Chloride	Less than .5 ppm	Less than .5 ppm
	Ammonia Nitrate	Less than .5 ppm	Less than .5 ppm
	Ammonia Hydroxide	Less than .5 ppm	Less than .5 ppm
	Ammonia Sulfate	Less than .5 ppm	Less than .5 ppm
	Total Dissolved Solids (TDS)	Less than 1000 ppm	1000-1500 ppm
Iron Fouling (Biological Growth)	Iron, Fe^{2+} (Ferrous) Bacterial Iron Potential	None	None
	Iron Oxide	Less than 1 ppm. Above this level deposition will occur.	Less than 1 ppm. Above this level deposition will occur.
Erosion	Suspended Solids	Less than 10 ppm and filtered for max of 600 micron size	Less than 10 ppm and filtered for max of 600 micron size
	Threshold Velocity (Fresh Water)	5-8 ft/sec	8-12 ft/sec

Note: Grains = PPM divided by 17 • mg/l is equivalent to PPM

Electrical Connections

General

Be sure the available power is the same voltage and phase as that shown on the unit serial plate. Line and low voltage wiring must be done in accordance with local codes or the National Electric Code, whichever is applicable.

208 Volt Operation

All Envision Series 208/230 units are factory wired for 230 volt operation. For 208 volt operation, the red and blue transformer wires must be switched.

Microprocessor Remote Thermostat Wiring

Figure 5

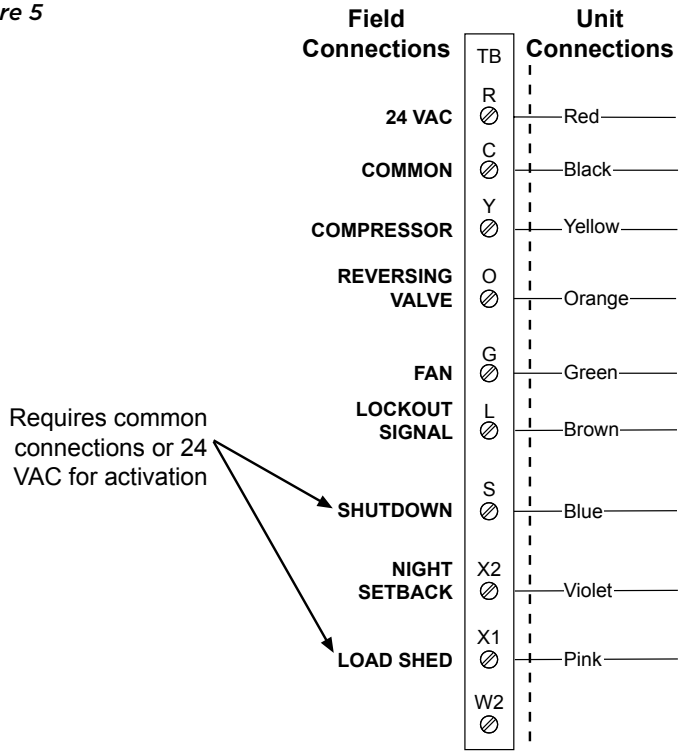

Auxiliary Heat Ratings

Model	Rated Voltage	Voltage Min./Max.	Heater Element Watts	Fan Motor FLA	Heater Element FLA	Total Unit FLA	Min. Circuit Amp.	Max. Fuse/ Brkr.
09-12	208/60/1	197/254	2000	0.50	9.62	10.1	12.7	15
	230/60/1	197/254	2445	0.50	10.63	11.1	13.9	15
	265/60/1	239/292	2000	0.55	7.55	8.1	10.1	15
15-18	208/60/1	197/254	3000	0.69	14.42	15.1	18.9	20
	230/60/1	197/254	3668	0.69	15.95	16.6	20.8	25
	265/60/1	239/292	3000	0.65	11.32	12.0	15.0	15

3/4/08

Always refer to unit name plate data prior to installation.

Unit Electrical Data

Model	Rated Voltage	Voltage Min/Max	Compressor			Fan Motor FLA	Total Unit FLA	Min Circ Amp	Max Fuse/ HACR
			MCC	RLA	LRA				
09	208-230/60/1	197/253	6.4	4.1	21.0	0.50	4.6	5.6	10
	265/60/1*	238/292	na	4.3	22.0	0.50	4.8	5.9	10
12	208-230/60/1	197/253	7.7	4.9	25.0	0.50	5.4	6.7	10
	265/60/1*	238/292	na	5.3	22.0	0.50	5.8	7.1	10
15	208-230/60/1	197/253	9.2	5.9	29.0	0.69	6.6	8.1	10
	265/60/1*	238/292	na	5.6	28.0	0.65	6.3	7.7	10
18	208-230/60/1	197/253	10.4	6.7	33.5	0.69	7.3	9.0	15
	265/60/1*	238/292	na	7.3	28.0	0.65	8.0	9.8	15

HACR circuit breaker in USA only 4/8/08

* RLA determine per UL1995 test procedure and not from compressor rating.

Fan Performance Data

Model	CFM	
	Low Speed	High Speed
09	300	350
12	300	350
15	450	500
18	450	500

Factory settings are in Bold
Air flow values are with dry coil and standard filter.

For wet coil performance first calculate the face velocity of the air coil (Face Velocity [fpm] = Airflow [cfm] / Face Area [sq ft]). Then for velocities of 200 fpm reduce the static capability by 0.03 in. wg, 300 fpm by 0.08 in. wg, 400 fpm by 0.12in. wg. and 500 fpm by 0.16 in. wg.

Wiring Schematic

CCM - ELECTRONIC THERMOSTAT

208-230-265/60/1

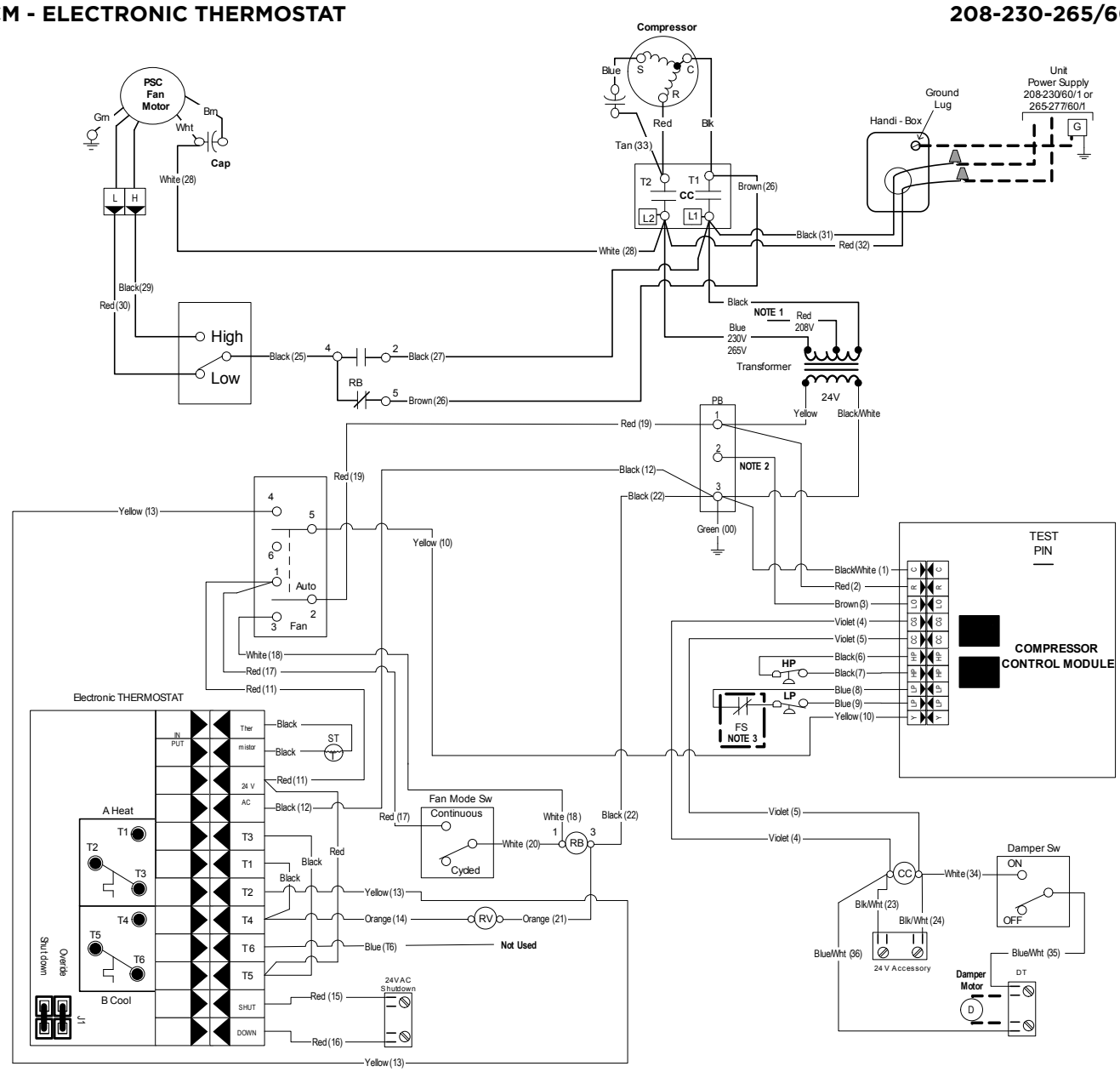

Legend

- Factory low voltage wiring
- Factory line voltage wiring
- Field low voltage wiring
- Field line voltage wiring
- Quick connect terminal
- Wire nut

CC - Compressor Contactor
DT - Damper Terminal Block
FS - Freeze Sensing Device
HP - High Pressure Switch
LP - Low Pressure Switch
PB - Power Block
RB - Blower Relay
RV - Reversing Valve Coil
ST - Entering Air Temperature Sensor

- L1 — Field wire lug
- Earth Ground
- Relay Contacts- N.O., N.C.
- P — Polarized connector

- HP — Switch - High Pressure
- LP — Switch - Low Pressure
- Relay coil
- Capacitor
- Thermistor
- Temperature Switch

Notes:

1. Switch Red and Blue wires for 208 volt operation
2. Terminal C of 24 V PB is used as "L" output for Brown wire3 for Lockout
3. Optional field installed freeze sensing device.

6/10/08

Wiring Schematic

CCM w/EH - ELECTRONIC THERMOSTAT

208-230-265/60/1

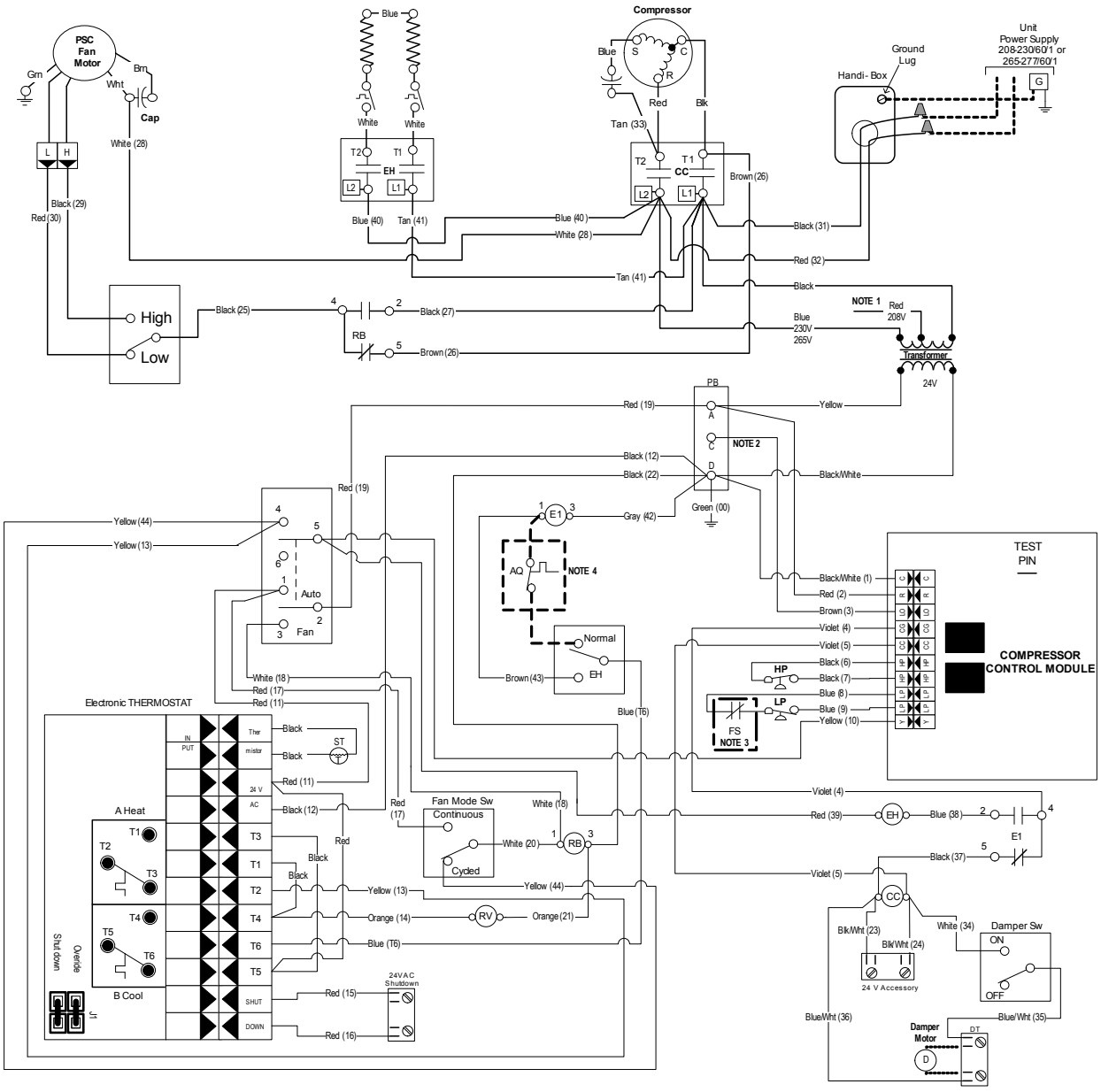

Legend

Factory low voltage wiring Factory line voltage wiring Field low voltage wiring Field line voltage wiring Quick connect terminal Wire nut	AQ - Aquastat CC - Compressor Contactor DT - Damper Terminal Block E1 - Electric Heat Relay EH - Electric Heat Contactor FS - Freeze Sensing Device HP - High Pressure Switch LP - Low Pressure Switch PB - Power Block RB - Blower Relay RV - Reversing Valve Coil ST - Entering Air Temperature Sensor	L1 Field wire lug Earth Ground Relay Contacts N.O., N.C. P 2 3 1 Polarized connector	HP Switch - High Pressure LP Switch - Low Pressure Relay coil Capacitor Thermistor Temperature Switch	Notes: 1. Switch Red and Blue wires for 208 volt operation 2. Terminal C of 24 V PB is used as "L" output for Brown wire 3 for Lockout 3. Optional field installed freeze sensing device. 4. Optional field installed aquastat

6/10/08

Wiring Schematic

VERSATEC CONTROL - EH & REMOTE WALL THERMOSTAT 208-230-265/60/1

Legend for Schematic [A]

Normal Control Timing Table

Blower off delay	30 seconds
Compressor on delay	10 seconds
Short cycle delay	5 minutes
Minimum compressor on time	60 seconds (except for fault condition)
High pressure fault recognition delay	Less than 1 second
Low pressure fault recognition delay	30 seconds
Freeze sensing fault recognition delay	30 seconds
Condensate overflow fault recognition delay	30 seconds
Low pressure fault bypass delay	2 minutes
Freeze sensing fault bypass delay	2 minutes
Motorized valve delay	90 seconds
Random start delay	0 - 25 seconds

Test Control Timing Table

Blower off delay	5 seconds
Compressor on delay	2 seconds
Short cycle delay	15 seconds
Minimum compressor on time	5 seconds (except for fault condition)
High pressure fault recognition delay	Less than 1 second
Low pressure fault recognition delay	30 seconds
Freeze sensing fault recognition delay	30 seconds
Condensate overflow fault recognition delay	30 seconds
Low pressure fault bypass delay	0 seconds
Freeze sensing fault bypass delay	0 seconds
Motorized valve delay	90 seconds
Random start delay	0 seconds

Versatec Logic Board Physical Layout

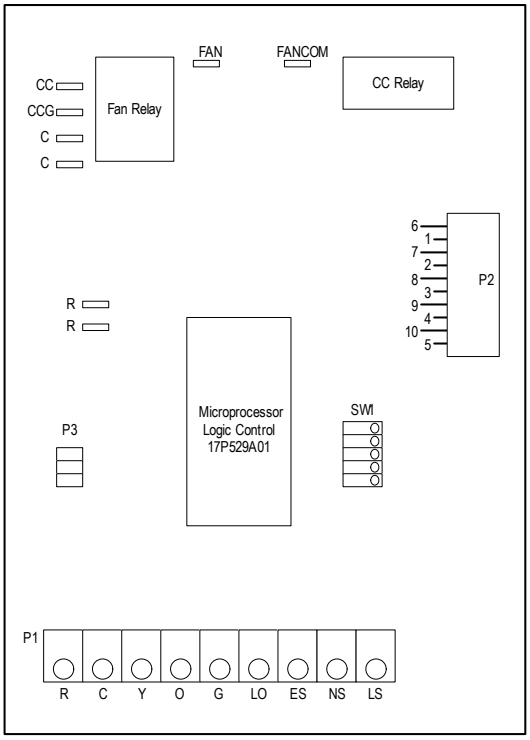

LED Display Mode Table

LED	Normal Display Mode
	SW1 - #4 On, SW2 Off
Drain	Drain pan overflow lockout
Water Flow	FS thermistor (loop < 15°F, well < 30°F) lockout
High Press	High pressure > 600 PSI lockout
Low Press	Low pressure < 40 PSI lockout
Air Flow	Not used
Status	Microprocessor malfunction*
DHW Limit	Not Used
HWD	SW2 status (Off = down position, On = up position)

Diagnostic Modes			
LED	**Current Fault Status**	**Inputs**	**Outputs**
	SW1 - #4 On, SW2 On	SW1 - #4 Off, SW2 Off	SW1 - #4 Off, SW2 On
Drain	Drain pan overflow	Y	Compressor
Water Flow	FS thermistor (loop < 15°F, well < 30°F)	G	FAN
High Press	High pressure > 600 PSI	O	O
Low Press	Low pressure < 40 PSI	ES	ES
Air Flow	Not used	NS	NS
Status	Not used	LS	LS
DHW Limit	Not used	Not Used	Not Used
HWD	SW2 in the On position	Off position	On position

*Flashing Status light indicates microprocessor is functioning properly Solid "on" indicates a microprocessor malfunction.

Logic Board DIP Switch Settings

Switch	OFF	ON
SW1 - 1	Test - Selected timings sped up to facilitate troubleshooting	Normal - Standard timings
SW1 - 2	Loop - Closed loop freeze sensing setting (15°F)	Well - Open loop freeze sensing setting (30°F)
SW1 - 3	Enables NS features	Normal - Standard thermostat operation
SW1 - 4	IO Display * - Enables Input/Output display on external LED board*	Normal * - Unit status display
SW1 - 5	Motorized Valve - 1.5 minute compressor on delay	Normal - Standard delay on call from compressor used
SW2	OFF * - Normal or Input display mode activated	ON * - Current fault or Output display mode activated

*Refer to LED Display Mode table for position of SW1-4 and SW2

Operational Logic Table

Mode	Inputs	Fan	Comp	RV
Htg	Y	ON	ON	OFF
Clg	Y,O	ON	ON	ON
Fan	G	ON	OFF	OFF

Wiring Schematic

VERSATEC CONTROL - EH & REMOTE WALL THERMOSTAT 208-230-265/60/1

Schematic [A]

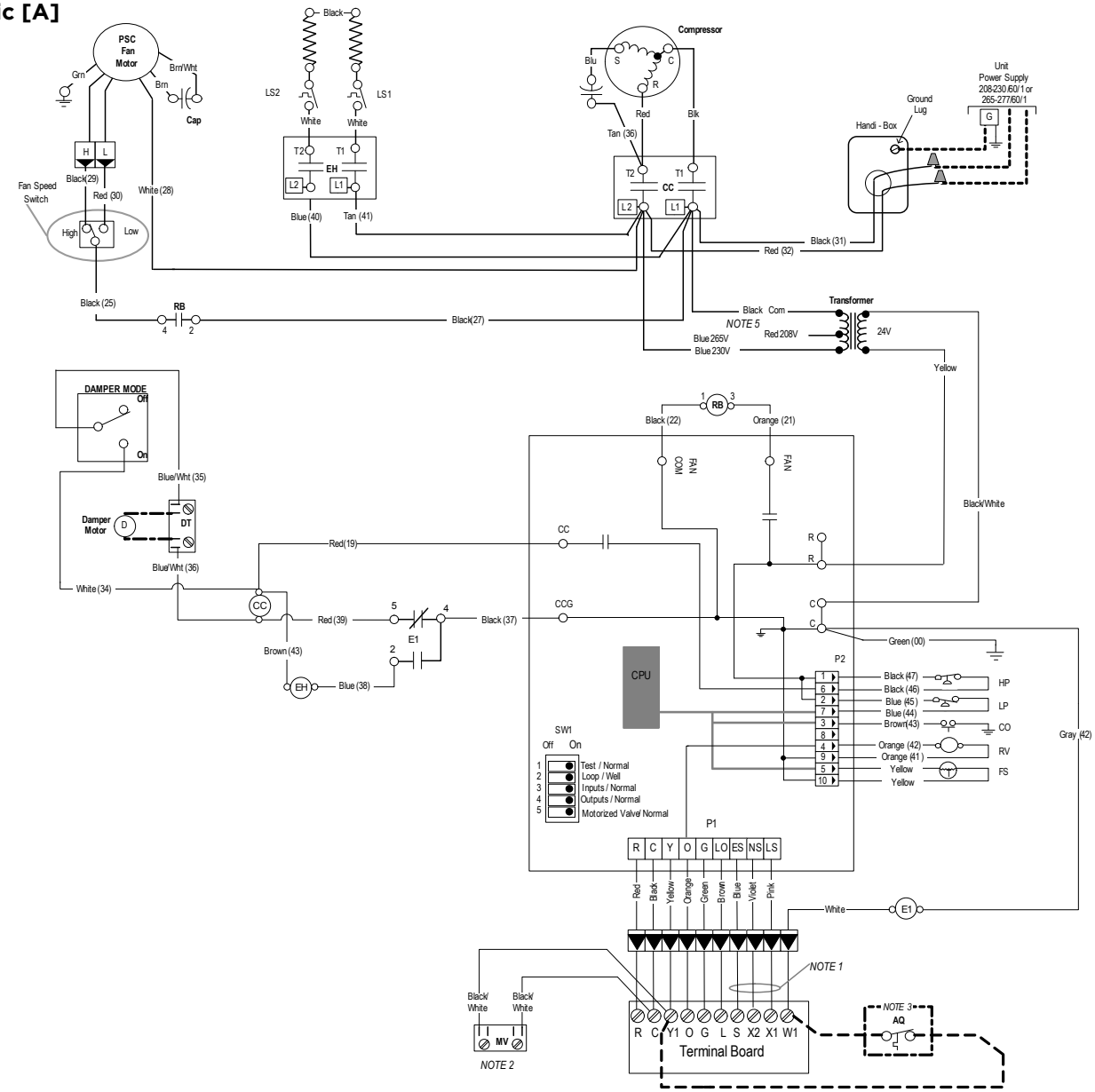

Legend

- Factory low voltage wiring
- Factory line voltage wiring
- Field low voltage wiring
- Field line voltage wiring
- DC voltage PCB traces
- Internal junction
- Quick connect terminal
- Wire nut
- L1 Field wire lug
- Ground
- Relay Contacts- N.O., N.C.
- Thermistor
- Relay coil
- Switch - High pressure
- Switch - Low pressure
- P Polarized connector
- Condensate Overflow

AQ – Aquastat
CC – Compressor Contactor
CO – Condensate Overflow
DT – Damper Terminal Block
E1 – Electric Heat Relay
EH – Electric Heat Contactor
ES – Emergency Shutdown
FS – Freeze Sensing Device
HP – High Pressure Switch
LP – Low Pressure Switch
LS – Loadshed
MV – Motorized Valve
NS – Night Setback
RB – Blower Power Relay
RV – Reversing Valve Coil
SW1 – DIP Switch #1

Notes:
1 - Requires common connection or24 VAC for activation.
2 - When field installed 24VAC motorized valve is used connect to C and Y or SV terminals
3 - Optional field installed aquastat for use with single heat
4 - Check installation wiring information for specific thermostat hookup instructions
5 - Switch blue and red wires for208/ operation.

6/10/08

Wiring Schematic

FX10 - EH **208-230-265/60/1**

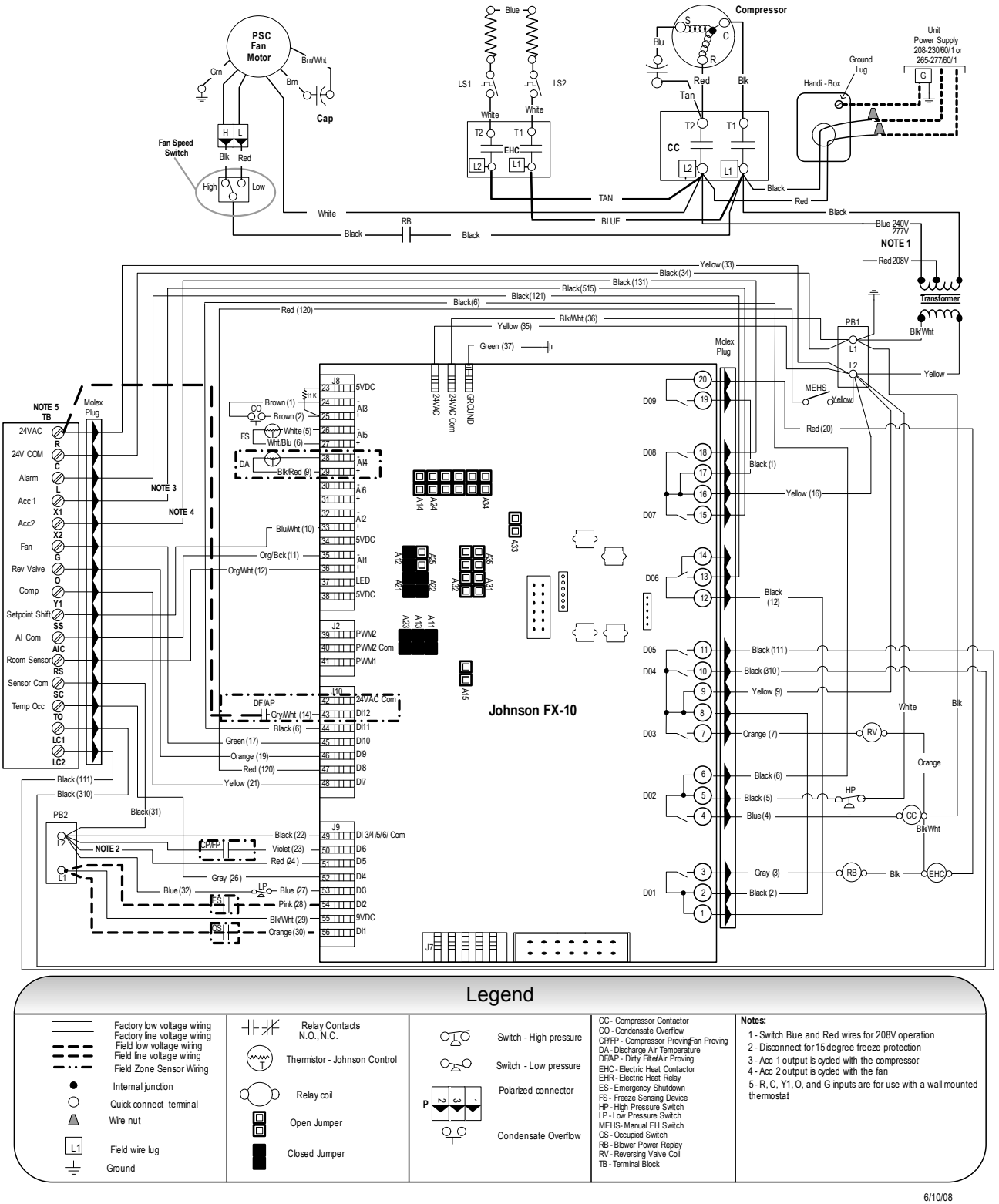

Legend

Factory low voltage wiring Factory line voltage wiring Field low voltage wiring Field line voltage wiring Field Zone Sensor Wiring Internal junction Quick connect terminal Wire nut L1 Field wire lug Ground	Relay Contacts N.O., N.C. Thermistor - Johnson Control Relay coil Open Jumper Closed Jumper	Switch - High pressure Switch - Low pressure P 2 3 1 Polarized connector Condensate Overflow	CC - Compressor Contactor CO - Condensate Overflow CPFP - Compressor Proving/Fan Proving DA - Discharge Air Temperature DF/AP - Dirty Filter/Air Proving EHC - Electric Heat Contactor EHR - Electric Heat Relay ES - Emergency Shutdown FS - Freeze Sensing Device HP - High Pressure Switch LP - Low Pressure Switch MEHS - Manual EH Switch OS - Occupied Switch RB - Blower Power Replay RV - Reversing Valve Coil TB - Terminal Block	**Notes:** 1 - Switch Blue and Red wires for 208V operation 2 - Disconnect for 15 degree freeze protection 3 - Acc 1 output is cycled with the compressor 4 - Acc 2 output is cycled with the fan 5 - R, C, Y1, O, and G inputs are for use with a wall mounted thermostat

6/10/08

Envision Console Controls

Control	General Description	Application	Display/Interface	Protocol	Thermostat Options
CCM Control	The CCM (Compressor control module) is a more reliable replacement for electro-mechanical control applications. It features a small microprocessor board that handles the lockout function of the unit. A second microporcessor handles the unit mounted thermostat for maintaining accurate room temperature.	Residential and commercial applications requiring minimal but reliable controls. Includes Random Start, High and low pressure switches and auto changeover capability.	Dial thermostat with Hi and Low fan speeds, and auto changeover or cont fan selection switches.	None	**Unit Mounted Digital Dial Thermostat** **Remote Mounted Standard Thermostat**
Versatec Control	The Versatec Control is a microprocessor based board that adds the features of emergency shutdown (ES), night setback (NS), water freeze sensing (FS), Load Shed (LS) and condensate overflow (CO). The Versatec Control also features Optional Field servicing LED's for mode, Fault and diagnostic indication.	Residential and commercial applications requiring more controls features than CCM and Includes Random Start, High and low pressure switches, auto changeover capability, emergency shutdown (ES), night setback (NS), load shed (LS), water freeze sensing (FS), and condensate overflow (CO).	Optional field servicing LED board for mode, fault and diagnostic indication	None	**Unit Mounted Digital Dial Thermostat** **Remote Mounted Standard Thermostat**
FX10	The FX10 microprocessor control is self contained control featuring LP, LOC, HP, LWT, and condensate overflow fault modes can be displayed on BAS system. Optional handheld Medium User Interface (MUI) Control can be used for additional setup or servicing. Program customization is possible. This control is suited for both single and dual capacity compressors as well as PSC and ECM fan motors.	Commercial applications using single and dual capacity compressors with either PSC or ECM fan motors. Also suitable for multi-compressor products. Cannot be integrated with centralized building automation systems. Software can be customized for specific projects.	Optional Medium User Interface (MUI) can be used as a field service tool.	Standalone	**Unit Mounted Digital Dial Sensor** **Remote Mounted Standard Thermostat** **Remote Mounted Sensor**
FX10 w/ N2	FX10 Control functions as both unitary heat pump control and DDC communication, therefore detail operational and fault information is available to BAS. Other features are same as FX10 with addition of Johnson Controls N2 compatibility.	Same as FX10 with Johnson Controls N2 BAS compatibility.	Optional Medium User Interface (MUI) can be used as a field service tool.	Johnson Controls N2 network	**Unit Mounted Digital Dial Sensor** **Remote Mounted Standard Thermostat** **Remote Mounted Sensor**
FX10 w/ LonWorks	FX10 Control functions as both unitary heat pump control and DDC communication, therefore detail operational and fault information is available to BAS. Other features are same as FX10 with addition of LonWorks compatibility.	Same as FX10 with LonWorks BAS compatibility.	Optional Medium User Interface (MUI) can be used as a field service tool.	LonWorks	**Unit Mounted Digital Dial Sensor** **Remote Mounted Standard Thermostat** **Remote Mounted Sensor**
	FX10 Control functions as both unitary heat pump control and DDC communication, therefore detail operational and fault information is available to BAS. Other features are same as FX10 with addition of BACnet compatibility.	Same as FX10 with BACnet BAS compatibility. Due to communication speed, no more than 40 units should be connected to a single trunk of the network.	Optional Medium User Interface (MUI) can be mounted or used as a field service tool.	BACnet - MS/TP (19,200 Baud Rate)	**Unit Mounted Digital Dial Sensor** **Remote Mounted Standard Thermostat** **Remote Mounted Sensor**

Standard CCM Control Features

Compressor control module (CCM) controls are standard on the Envision console heat pump. This control features unit mounted thermostat and switches,
Features of the standard control are:

- Easy to understand color coded thermostat adjustment markings.
- Large, rocker type mode and fan switches.
- Internally mounted fan switch to choose cycled or constant fan operation.
- High pressure and low pressure safety controls to protect the unit components.
- Lockout circuit to shut down unit operation upon receipt of a fault indicator from the safety controls.
- A 24 volt control circuit allows for safe and easy diagnosis.

Envision Console Controls

The user selects either “Heat/Cool” or “Fan Only” on the mode switch, then either “High” or “Low” at the fan speed switch. The temperature can be controlled by rotating the thermostat control knob.

Figure 6: Unit Mounted Control

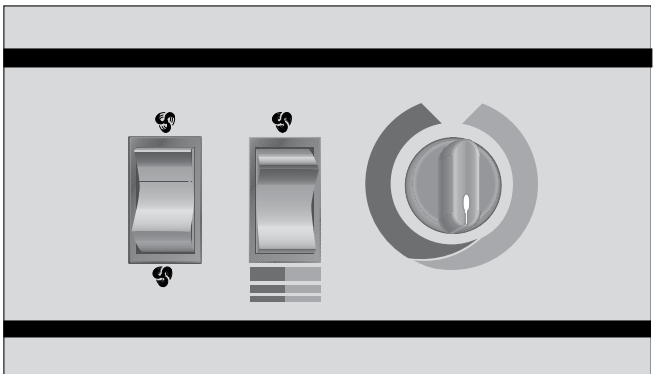

The “Fan Only” setting provides constant fan operation.

In the “Heat” mode, a call for heat by the thermostat closes the compressor contactor contacts, energizing the compressor, which will run until the thermostat is satisfied.

In the “Cool” mode, a call for cooling by the thermostat energizes the reversing valve and closes the compressor contactor contacts, energizing the compressor, which will run until the thermostat is satisfied.

The emergency electric heat operation in the “Heat/Cool” mode is subject to the setting of the internally mounted mode switch. The optional, factory installed electric heat will operate when the internally mounted mode switch is in the “Emergency Heat” mode. In the “Heat” mode, a call for heating energizes the fan and electric heater contactor, energizing the electric heat elements and fan, which will run until the thermostat is satisfied. When the internally mounted mode switch is in the “Normal/Boilerless” mode the unit operates in its normal “Heat/Cool” operation, unless there is an aquastat controller. When the normally open circuit of the aquastat closes and the unit is in the heating mode, it will switch to the “Emergency Heat” condition until the thermostat is satisfied or the aquastat opens restarting the compressor.

If either the low or high pressure safety switches are opened, the compressor and reversing valve are disabled by the lockout relay. Unit operation will resume only after the voltage to the unit is interrupted or the mode switch is placed in the “Off” position.

If the electric heat limit switches are opened, the electric heat is disabled.

Optional Versatec Microprocessor Control Features

The Versatec microprocessor board provides control of the entire unit as well as outputs for status modes, faults and diagnostics. The control system is a microprocessor-based control board that is located in the unit control box. This feature is available for either unit mounted controls or optional remote wall mounted thermostat. A 9-pin low voltage terminal strip provides all necessary terminals for the wall mounted thermostat.

Startup

The unit will not operate until all the inputs and safety controls are checked for normal operating conditions.

Fault Retry

All faults are retried twice before finally locking the unit out to prevent nuisance service calls.

Component Sequencing Delays

Components are sequenced and delayed for optimum unit performance.

Short Cycle Protection and Random Start

The control allows a minimum on or off time of 5 minutes for short cycle protection. A random time delay of 0 to 30 seconds is generated after each power-up to prevent simultaneous start up of all units within a building after the release from an unoccupied cycle or power loss.

Night Setback

A grounded signal to common or connecting 24 VAC to the NS terminal will initiate the night setback mode.

Load Shed

A grounded signal to common or connecting 24 VAC to the LS terminal places the controller into the load shed mode. The compressor will become disabled and the fan will start upon a thermostat call for heating or cooling.

Emergency Shutdown

A grounded signal to common or connecting 24 VAC to the ES terminal places the controller into the emergency shutdown mode. The compressor and fan operation are suspended while in the emergency shutdown mode.

Condensate Overflow Protection

The board incorporates an impedance liquid sensor at the top of the condensate drain pan. Upon a continuous 30-second sensing of the condensate, the cooling operation of the unit is suspended.

Safety Controls

The microprocessor board receives separate signals from a high pressure switch for safety, a low pressure switch to

Envision Console Controls

prevent loss of refrigerant charge and a low suction temperature thermistor for freeze sensing. Upon a continuous 30-second measurement of the fault (immediate for high pressure), compressor operation is stopped.

Control Tables for Optional Versatec Microprocessor

Logic Board DIP Switch Settings

Switch	OFF	ON
SW1 - 1	Test - Selected timings sped up to facilitate troubleshooting	Normal - Standard timings
SW1 - 2	Loop - Closed loop freeze sensing setting (15°F)	Well - Open loop freeze sensing setting (30°F)
SW1 - 3	Commercial - Enables NS features when TA32U02 thermostat is used	Normal - Standard thermostat operation
SW1 - 4	IO Display* - Enables Input/Output display on external LED board	Normal* - Unit status display
SW1 - 5	Configures board for 2-speed compressor without fan	Configures board for 2-speed compressor with fan

Normal Control Timing

Blower off delay	30 seconds
Compressor on delay	10 seconds
Short cycle delay	5 minutes
Miniumum compressor on time	2 minutes (except for fault condition)
High pressure fault recognition delay	Less than 1 second
low pressure fault recognition delay	30 seconds
Freeze sensing fault recognition delay	30 seconds
Condensate overflow fault recognition delay	30 seconds
Low pressure fault bypass delay	2 minutes
Freeze sensing fault bypass delay	2 minutes
Power on delay	5 minutes

Operational Logic

Mode	Inputs	Fan	Comp	RV
Htg	Y	ON	ON	OFF
Clg	Y,O	ON	ON	ON
Fan	G	ON	OFF	OFF

Test Control Timing

Blower off delay	5 seconds
Compressor on delay	2 seconds
Short cycle delay	15 seconds
Miniumum compressor on time	5 seconds (except for fault condition)
High pressure fault recognition delay	Less than 1 second
low pressure fault recognition delay	30 seconds
Freeze sensing fault recognition delay	30 seconds
Condensate overflow fault recognition delay	30 seconds
Low pressure fault bypass delay	0 seconds
Freeze sensing fault bypass delay	0 seconds
Power on delay	15 seconds
Fault off time	5 minutes

Diagnostic Modes

LED	Current Fault Status SW1 - #4 On, SW2 On	Inputs SW1 - #4 Off, SW2 Off	Outputs SW1 - #4 Off, SW2 On
Drain	Drain pan overflow	Y	Compressor
Water Flow	FS thermistor (loop <15°F, well <30°F)	G	FAN
High Press	High pressure >600 PSI	O	O
Low Press	Low pressure <40 PSI	ES	ES
Air Flow	Not used	NS	NS
Status	Not used	LS	LS
DHW Limit	Not used	Not used	Not used
HWD	SW2 in the On position	Off position	On position

Envision Console Controls

Optional FX10 Control

Main FX 10 Board

The optional FX10 control provides unparalleled capability in several areas including performance monitoring, zoning, humidity, energy management, and service diagnosis, and then communicates it all thru standard DDC protocols like N2, Lon and BACnet (MS/TP @ 19,200 Baud rate).

The most unique feature is integrating the FX10 into the Envision series as both the heat pump and DDC controller providing both a cost advantage and providing features not typically found on WLHP controls. This integration allows heat pump monitoring sensors, status and service diagnosis faults to be communicated thru the DDC direct to the building automation system (BAS), giving building supervisors detailed and accurate information on every piece of equipment without removing an access panel.

FX10 Advanced Control Overview

The Johnson Controls FX10 board is specifically designed for commercial heat pumps and provides control of the entire unit as well as input ports for Open N2, LonTalk, BACnet (MS/TP @ 19,200 Baud rate) communication protocols as well as an input port for a user interface. The user interface is an accessory item that can be used to aid in diagnostics and unit setup. A 16-pin low voltage terminal board provides terminals for common field connections. The FX10 Control provides:

- Operational sequencing
- High and low-pressure switch monitoring
- General lockout
- Water Coil Low Temperature (Freeze Sensing)
- Condensate overflow sensing
- Lockout mode control
- Emergency shutdown mode
- Random start and short cycle protection

Short Cycle Protection

Allows a minimum compressor “off” time of four minutes and a minimum “on” time of two minutes.

Random Start

A delay of 1 to 120 seconds is generated after each power-up to prevent simultaneous startup of all units within a building after the release from an unoccupied cycle or power loss.

Emergency Shutdown

A field-applied dry contact can be used to place the control into emergency shutdown mode. During this mode, all outputs on the board are disabled.

Water Coil Low Temperature (Freeze Sensing) Limit

Field selectable for 15° or 30°F (-9° or -1°C)

Installation Options

- Standalone controlled by standard room thermostat
- Standalone with a Zone Temperature Sensor (must have user interface to change set points beyond the allowed +/- 5°F)
- Integrated into BAS by adding communication module

Accessory Outputs

Quantity 2. One cycled with fan, other with compressor.

User Interface

4 x 20 backlit LCD.

Optional Plug-in Communication Modules - (compatible with standard BAS protocols)

- Open N2
- LonTalk
- BACnet (MS/TP @ 19,200 Baud rate)

Display

Requires DLI Card/Kit. Up to 2 displays, either 1 local and 1 remote, or 2 remote. (A 2-display configuration requires identical displays.) Local display can be up to 3 meters from the controller, power supply, and data communication. Remote display can be up to 300 meters from the controller. Remote display must be independently powered with data communication done via 3 pole shielded cable.

Envision Console Controls

Control Timing & Fault Recognition Delays

Lead compressor "ON" delay.....90 seconds
(not applicable for single compressor models)
Minimum compressor "ON" time.....2 minutes
(except for fault condition)
Short cycle delay.....5 minutes
Random start delay.....0-120 seconds
High pressure fault.....<1 second
Low pressure fault.....30 seconds
Water coil low temperature (freeze sensing) fault.....30 seconds
Condensate overflow fault.....30 seconds
Low pressure fault bypass.....2 minutes
Water coil low temperature (freeze sensing)
fault bypass.....2 minutes

Notes: Refer to Submittal Data SD1981, Application Guide AGFX10, or BACnet Protocol Implementation Conformance Statement for more information.

Optional FX10 Microprocessor and BAS Interface

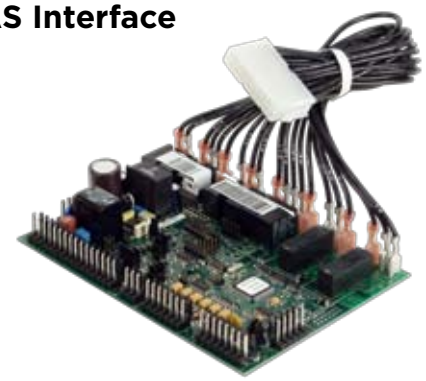

The FX10 is a microprocessor based control that not only monitors and controls the heat pump but also can communicate any of this information back to the building automation system (BAS). This means that not only does the control monitor the heat pump at the unit you can also monitor and control many the features over the BAS. This clearly puts the FX10 in a class of its own.

The control will enumerate all fault conditions (HP, LP, CO, LOC, and Water Coil Low Temp (Freeze Sensing)) over a BAS as well as display them on a medium user interface (MUI). HP, LP, CO and Water Coil Low Temp (Freeze Sensing) faults can all be reset over a BAS. A Loss Of Charge fault can not be reset or bypassed until the problem has been corrected. A MUI is invaluable as a service tool for the building service team.

The unit can be commanded to run by a typical heat pump thermostat or run based on heating and cooling set points supplied by a BAS. The control board is wired with quick connect harnesses for easy field change out of a bad control board. All ECM variable fan speed settings can be changed over a BAS or with a MUI. The control has an input programmed to enable field installed emergency heat in the event that the compressor is locked out. This input can also be commanded on from a BAS as needed. An alarm history can be viewed through the MUI and will be held in memory until the unit is power cycled. Relative humidity can be read by a 0-5VDC humidity sensor that is displayed over the network. If you are using an ECM fan motor the control can enable dehumidification mode based on a set point in the control. The dehumidification set point itself can also be changed over a BAS or with a MUI. Dehumidification mode can also be enabled by the BAS. Because the FX10 is not factory configured to read CO^2 levels, contact the factory for application assistance.

The FX10 control has unused analog and digital inputs for field installed items such as air temperature, water temperature, CO^2 or current status switches. The control has unused binary and PWM outputs that can be commanded over the BAS for field use. An optional Medium User Interface (MUI) for control setup and advanced diagnostics is available with some mounting kits, MUIK1 - Panel mount version and the MUIK2-Wall mount version.

Zone Sensors

There are two options for zone sensors that can be used with the FX10 control. Both sensors use a Johnson controls A99 positive temperature coefficient type sensor. The TAXXJ02 has a set point adjustment now which will give the end user a +/- 5°F adjustment from the set point as well as a push button that can be used for temporary occupancy. The control leaves the factory set to operate with a TAXXJ02 sensor and can be changed to read the TAXXA01 sensor through a building automation system or with a user interface.

Standard Features

- Anti Short Cycle
- High Pressure Protection
- Low Pressure Protection
- Water Coil Low Temperature (Freeze Sensing)
- Loss Of Charge Detection
- Random Start
- Display for diagnostics
- Reset Lockout at disconnect or through BAS
- 2 Accessory outputs
- Optional BAS add-on controls

DDC Operation & Connection

Other optional network protocol boards that can be added to the FX10 are:

- Johnson Control N2
- LonWorks
- BACnet

Envision Console Controls

- MS/TP @ 19,200 Baud rate
- Limit devices to 40 on a single trunk line.

Control and Safety Feature Details

Emergency Shutdown

The emergency shutdown mode can be activated by a command from a facility management system or a closed contact on BI-2. The default state for the emergency shutdown data point is off. When the emergency shutdown mode is activated, all outputs will be turned off immediately and will remain off until the emergency shutdown mode is de-activated. The first time the compressor starts after the emergency shutdown mode has been de-activated, there will be a random start delay present.

Lockout Mode

Lockout mode can be activated by any of the following fault signals: refrigerant system high pressure, refrigerant system low pressure, water coil low temperature (freeze sensing), and condensate overflow. When any valid fault signal remains continuously active for the length of its recognition delay, the controller will go into fault retry mode, which will turn off the compressor. After the Compressor short cycle delay, the compressor will attempt to operate once again. If three consecutive faults occur in 60 minutes during a single heating or cooling demand, the unit will go into lockout mode, turning off the compressor, enabling the alarm output, and setting the fan back to low speed operation until the controller is reset. If the control faults due to the low pressure input (BI-3) being open during the pre-compressor startup check, the control will go into lockout mode immediately, disabling the compressor from starting and enabling the alarm output (BO-6). The lockout condition can be reset by powering down the controller, by a command from the BAS, or by the holding the ESC and Return keys on the MUI for 5 seconds.

Water Coil Low Temp (Freeze Sensing) Limit (AI-5)

The water coil low temperature (freeze sensing) limit sensor will monitor the liquid refrigerant temperature entering the water coil in the heating mode. If the temperature drops below the water coil low temperature (freeze sensing) limit trip point for the recognition delay period, the condition will be recognized as a fault. The water coil low temperature (freeze sensing) limit trip point will be factory set for 30°F and will be field selectable for 15°F by removing a jumper wire on BI-5. The water coil low temperature (freeze sensing) limit fault condition will be bypassed 2 minutes at normal compressor startup, to allow the refrigeration circuit to stabilize. If the water coil low temperature (freeze sensing) limit sensor becomes unreliable at any time compressor operation will immediately be suspended until the problem is corrected. This should be displayed as an alarm on the BAS and the MUI. This alarm will be reported a “Water Low Temp Limit” fault.

High Pressure (BI-11)

The high-pressure switch shall be a normally closed (NC) switch that monitors the systems refrigerant pressure. If the input senses the high-pressure switch is open it must disable the compressor output immediately and count the fault. The compressor minimum on time does not apply if the high-pressure switch opens. The compressor will not restart until the compressor short cycle time delay has been satisfied.

Low Pressure (BI-3)

The low-pressure switch shall be a normally closed (NC) switch that monitors the systems refrigerant pressure. The input shall be checked 15 seconds before compressor start up to be sure the pressure switch is closed and then ignored for the first 2 minutes after the compressor output (BO-2) is enabled. If the switch is open continuously for (30) seconds during compressor operation the compressor output (BO-2) will be disabled. The compressor will not restart until the compressor short cycle time delay has been satisfied.

Condensate Overflow

The condensate overflow sensing circuit will monitor the condensate level as a resistance input to AI-3. If the condensate water level rises resulting in the input resistance rising above the set point for the recognition delay period, the condition will be recognized as a fault. The condensate will be subjected to a (30) second lockout delay which requires that the fault be sensed for a continuous (30) seconds before suspending unit operation.

Alarm Output (BO-6)

The alarm output will be enabled when the control is in the lockout mode and will be disabled when the lockout is reset.

Test Mode

Raising the zone temperature input (AI-1) reading to 180–220°F or by holding the ESC and down arrow keys on the MUI for 5 seconds will put the control into test mode. In test mode the random start delay and the compressor fixed on delay time will both be shortened to 5 seconds and the reversing valve will be allowed to cycle with out shutting down the compressor. If an MUI is connected to the control LED 8 will flash and the words “Test Mode Enabled” will be shown on the LCD display when the control is in test mode. Test mode will be disabled after a power cycle, 30 minute timeout, or by holding the ESC and Up arrow keys on the MUI.

Sequence of Operation

Power Fail Restart

When the controller is first powered up, the outputs will be disabled for a random start delay. The delay is provided to prevent simultaneous starting of multiple heat pumps. Once the timer expires, the controller will operate normally.

Envision Console Controls

Random Start Delay

This delay will be used after every power failure, as well as the first time the compressor is started after the control exits the unoccupied mode or the emergency shutdown mode. The delay should not be less than 1 second and not longer than 120 seconds. If the control is in test mode the random start delay will be shortened to 5 seconds.

Compressor Fixed On Delay Time

The Compressor Fixed On Delay Time will ensure that the compressor output (B02) is not enabled for (90) seconds after the control receives a call to start the compressor. This delay is adjustable from 30 – 300 seconds over a BAS or a MUI. If the control is in test mode the Compressor Fixed On Delay Timer will be shortened to 5 seconds.

Compressor Minimum On Delay

The compressor minimum on delay will ensure that the compressor output is enabled for a minimum of (2) minute each time the compressor output is enabled. This will apply in every instance except in the event the high pressure switch is tripped or emergency shutdown then the compressor output will be disable immediately.

Compressor Short Cycle Delay Time

The compressor short cycle time delay will ensure that the compressor output will not be enabled for a minimum of (5) minutes after it is disabled. This allows for the system refrigerant pressures to equalize after the compressor is disabled.

Heating Cycle

On a call for heating, the blower enable output and accessory output 2 will turn on immediately after the random start delay timer has been satisfied. If the compressor short cycle time delay has been satisfied, the compressor will turn on after the blower enable and accessory output 2 are on and the fixed compressor start delay timers have been satisfied.

Auxiliary heat output can be controlled over the BAS.

Set Point Control Mode

In set point control mode the reversing valve output will be disabled. As the temperature drops below the heating set point and begins to operate in the heating proportional band, the low capacity compressor output (BO-2) will be enabled. A PI loop in the programming of the control will determine when the full capacity compressor output (BO-4) is to be enabled. The compressor must be operating in low capacity for a minimum of 30 seconds before the full capacity compressor output can be enabled. During low capacity compressor operation the ECM2 blower will operate in medium speed and will operate in high speed when the compressor is operating at full capacity.

Thermostat Control Mode

In thermostat mode the compressor will be cycled based on Y1 and Y2 calls from a room thermostat. When the control receives a Y1 command (BI-7) from the thermostat the low capacity compressor output (BO2) will be enabled and the ECM2 blower will operate in medium speed. When the control receives a Y2 command (BI-8) from the thermostat the full capacity compressor output will be enabled and the ECM2 blower will operate in high speed. During the heating cycle the reversing valve will be commanded into the off position.

Cooling Cycle

On a call for cooling, the blower enable output and accessory output 2 will turn on immediately after the random start delay timer has been satisfied. If the compressor short cycle time delay has been satisfied, the compressor will turn on after the blower enable and accessory output 2 are on and the fixed compressor start delay timers have been satisfied.

Set Point Control Mode

In set point control mode the reversing valve output will be enabled. As the temperature falls below the cooling set point and begins to operate in the cooling proportional band, the low capacity compressor output (BO-2) will be enabled. A PI loop in the programming of the control will determine when the full capacity compressor output (BO-4) is to be enabled. The compressor must be operating in low capacity for a minimum of 30 seconds before the full capacity compressor output can be enabled. During low capacity compressor operation the ECM2 blower will operate in medium speed and will operate in high speed when the compressor is operating at full capacity.

Thermostat Control Mode

In thermostat mode the compressor will be cycled based on Y1 and Y2 calls from a room thermostat. When the control receives a Y1 command (BI-7) from the thermostat the low capacity compressor output (BO2) will be enabled and the ECM2 blower will operate in medium speed. When the control receives a Y2 command (BI-8) from the thermostat the full capacity compressor output will be enabled and the ECM2 blower will operate in high speed. During the cooling cycle the reversing valve will be commanded into the “ON” position.

Envision Console Controls

ECM2 Blower Operation

Fan speeds will be selected through the user interface or the facility management system. There will be a total of 12 speeds selectable with only three being selected at any one time. The lowest numbered speed selection set to ON will select the low-speed fan setting, the middle selection set to ON will select the medium-speed fan setting and the highest selection set to ON will select the high-speed fan setting. If all selections are set to OFF the software shall select speed setting 10 for low-speed, 11 for medium-speed, and will select speed setting 12 for high speed. If only one selection is set to ON, that selection will set the low-speed fan setting, the medium-speed setting will be 11, and the high-speed setting will be speed 12. The maximum low-speed setting will be speed 10 and the minimum high-speed setting will be speed 3. In addition there is a low limit setting in the software to prevent the ECM2 fan speed from being set below acceptable limits for each unit size.

ECM2 Fan air flow "Soft Switch Settings"

A set of 12 "soft switches" accessible through the user interface or building automation system are used to select the three fan speed settings for the ECM2 fan motor. The 12 soft switches work in exactly the same way as the hardware switches used on the Premier control (Refer to Fan Performance Data - ECM2 Motor for proper settings). No more than three soft switches may be set to the "ON" position. The first "ON" switch (the lowest number switch) determines the "low speed fan" setting. The second determines the "medium speed fan" setting, and the third determines the "high speed fan" setting.

Emergency Heat/Network Enabled Output (BO5)

This output is set from the factory to enable/disable emergency heat. If a problem occurs with the unit resulting in the compressor being locked out in heating mode, the control will automatically enable this output to turn on field installed electric heat. This output is interlocked with the fan proving input BI-6 (Fan proving sensors must be field supplied and installed). BI-6 must be connected to PB2 position 3 (see unit schematic) in the field if no fan proving sensor is desired. There is a configurable parameter available through a BAS network that must be enabled if this output is to be commanded over the BAS network.

MUI Alarm History Reporting

If a fault occurs the fault will be recorded in history for display on the medium user interface in the History Menu. Each fault type will be displayed in the history menu with a number between 0 and 3. A reading of 3+ will mean that fault has occurred more than three times in the past. The history menu can be cleared with a power cycle only. Alarm date and time are not included in the history.

Inputs & Outputs Configuration

Field Selectable Options

Water Coil Low Temp (Freeze Sensing) Limit Set Point (BI-5)

The water coil low temperature (freeze sensing) limit set point input allows you to adjust the water coil low temperature (freeze sensing) limit set point (AI-5). When the jumper is installed on BI-5 (Wire #24) the water coil low temperature (freeze sensing) limit set point is factory set for 30°F. When the jumper on BI-5 (Wire #24) is removed the water coil low temperature (freeze sensing) limit set point will be 15°F.

Accessory Outputs (BO-7 and BO-8)

Accessory Output 1 will be energized 90 seconds prior to the compressor output being energized. Accessory Output 2 will be energized with the fan output (BO-1). When the corresponding compressor output is turned off the accessory output will be deactivated immediately. These outputs are selectable for normally open or normally closed operation through the Medium User interface or through the Building Automation System.

Control Accessories

Zone Sensors

- TAXXJ02 Room Command Module
- TAXXA01 LCD Room Command Module
- A99 Sensor

MUI (LCD User interface) for diagnostics and commissioning.

- MUIK1 - Panel Mount, Portable
- MUIK2 - Wall Mount

SINGLE and DUAL STAGE WATER-TO-AIR			
Input Name	**Input**	**Output Name**	**Output**
Zone Temp 1	AI 1	Fan Enable	BO1
Relative Humidity Input	AI 2	Comp – Low Capacity	BO2
Condensate Level	AI 3	Reversing Valve	BO3
Universal Temp Input	AI 4	Comp – Full Capacity	BO4
Water Coil Low Temperature Limit	AI 5	Network Output/EH Output	BO5
Warm/Cool Adjust and Temp Occ	AI 6	Alarm	BO6
		Accessory 1 Output	BO7
Occupied	BI 1	Accessory 2 Output	BO8
Emergency Shutdown	BI 2	Network Controlled Output	B09
Stage 1 Low Pressure	BI 3		
Network Viewable Input 1	BI 4	ECM2 Fan	PWM1
Water Coil Low Temp Limit Set Point	BI 5	Network Controlled Output	PWM2
Network Viewable Input 2	BI 6		
Thermostat Y1	BI 7		
Thermostat Y2	BI 8		
Thermostat O	BI 9		
Thermostat G	B10		
Stage 1 High Pressure	BI11		
Compressor Proving	BI12		
XP10 Expansion Card			
Input Name	**Input**	**Output Name**	**Output**
Unused	AI 1	Unused	BO 1
Unused	AI 2	Unused	BO 2
Unused	AI 3	Unused	BO 3
Unused	AI 4	Unused	BO 4

Envision Console Controls

FX10 User Interface (MUI) Physical Layout

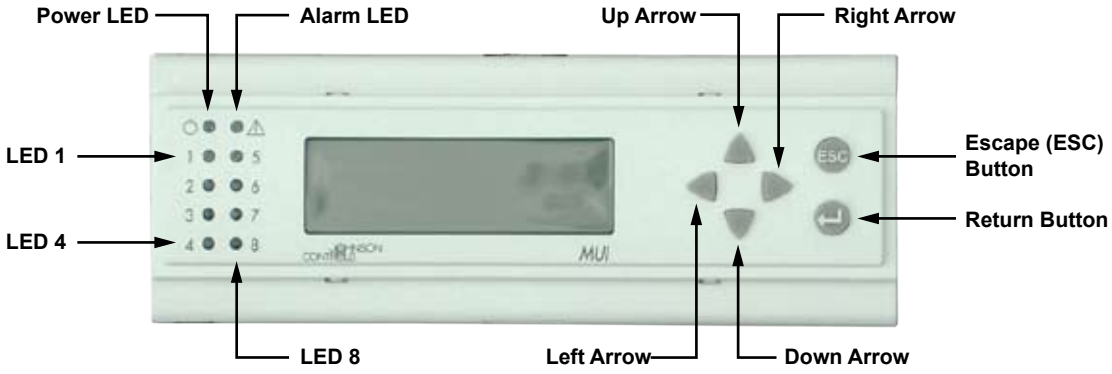

Alarm LED - Indicates a **Lock-Out** or a bad **Freeze Sensor**
Power LED - Shows FX processor is operational
LED 1 - Flashing shows **Compressor 1** running
LED 2 - Flashing shows **Full Capacity Compressor** running
LED 3 - On shows **Fan** running
LED 4 - On shows **Reversing Valve** in cool
LED 8 - Flashing shows unit in '**Test' Mode**

MUI Menu Navigation for Single Compressor - Envision Water-to-Air

Welcome

Info Status Temps Outputs Settings Maint Alarms Alm-History

Info
WFI
Envision Series
PROFXENV-XX
3/8/07

Status	
Run Mode	Auto
Eff Occup'y	Occ
Y1 Input	OFF
Y2 Input	OFF
G Input	OFF
O Input	OFF
Occ Input	Occ
Temp Occ Inp	OFF
Condensate	NML
Emg Input	Run
Lo Press	ON
Hi Press	ON
Rndm Tmr	0
BI-4 Input	OFF

Temps	
Zone Temp	77.2 ºF
Dis Air Temp	51.0 ºF
Eff Clg Setpt	70.0°F
Eff Htg Setpt	66.0°F
Water Coil	77.8°F
Low WC Limit	30.0°F
Humidity	56.7 %RH
WarmCool AI	14.6
WarmCoolAdj	0.2

Outputs	
nvoFanStatus	ON
CmpCmd Status	OFF
Cmp Capacity	OFF
Rev Valve	Heat
X1 Output	OFF
X2 Output	OFF
PWMOut	98%
BO5	OFF
BO9	OFF
AO2 Output	0%

Settings	
Unit of Measure	F
Occ Clg Setpt	73.9 ºF
Occ Htg Setpt	69.9 ºF
Unocc Clg	84.0 ºF
Unocc Htg	60.0 ºF
DeHumSetpt	0%
SensorSelect	TAXXJ02

Envision Console Controls

MUI Menu Navigation for Single Compressor - Envision Water-to-Air

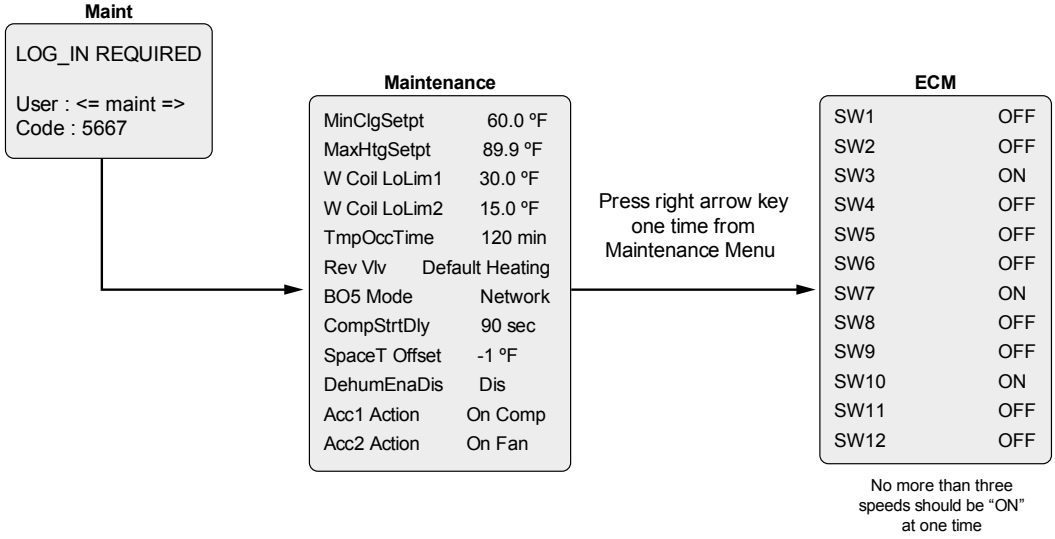

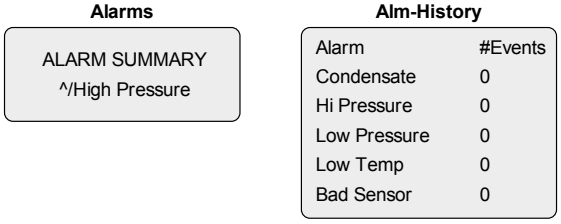

NOTE: This FX10 application implements an **alarm history** which is reset only by cycling power. This history shows on the Alm-History page. Any alarm showing 4+ events has occurred more than 4 times.

Alarm lock-outs are reset by cycling power, by pressing the "ESC" and Return ↵ keys simultaneously for a minimum of 15 seconds, or by commanding the nviAlarmReset over the BAS network.

Test mode is enabled by holding the 'Esc' and Down Arrow simultaneously for a minimum of 15 seconds and releasing. Test mode times out after 30 minutes, and may also be ended by pressing 'ESC' and Up Arrow simultaneously and releasing. Test Mode bypasses the On Delay (90 sec) and Random Start timers for quicker troubleshooting. It also allows cycling the reversing valve without compressor shutdown.

Envision Console Controls

N2

N2 Open			Point Description
Point Type	Point Address	Long Name	
ADF	1	nciSetpoints.Occupied_Co	Occupied Cooling Setpoint Input (Read/Write)
ADF	2	nciSetpoints.Standby_Coo	Standby Cooling Setpoint Input (Read/Write)
ADF	3	nciSetpoints.Unoccupied_	Unoccupied Cooling Setpoint Input (Read/Write)
ADF	4	nciSetpoints.Occupied_He	Occupied Heating Setpoint Input (Read/Write)
ADF	5	nciSetpoints.Standby_Hea	Standby Heating Setpoint Input (Read/Write)
ADF	6	nciSetpoints.Unoccupi5#6	Unoccupied Heating Setpoint Input (Read/Write)
ADF	7	nciMinClgSetpt	Minimum Cooling Setpoint Input (Read/Write)
ADF	8	nciMaxHtgSetpt	Maximum Heating Setpoint Input (Read/Write)
ADF	9	nvoSpaceTemp	Space or Zone Temperature Value (Read Only)
ADF	10	nvoDischAirTemp	Discharge Air Temp **Field Supplied Only** (Read Only)
ADF	11	nvoEffClgSetpt	Effective Cooling Setpoint Value (Read Only)
ADF	12	nviSpaceTemp	Space or Zone Temperature Value Override(Write)
ADF	64	nvoEffHtgSetpt	Effective Heating Setpoint Value (Read Only)
ADF	54	nciAux5LevP	Dehumidification Setpoint (Read/Write)
ADF	15	nciAux1Temp	Heating Freeze Protection Temperature Setpoint Value (Read/Write)
ADF	16	nciAux2Temp	Heating Freeze Protection Temperature Setpoint Value (Read/Write)
ADF	17	nvoUnitStatus.Heat_Outpu	1st Stage Compressor Heating Output (Read Only)
ADF	19	nvoUnitStatus.Cool_Outpu	1st Stage Compressor Cooling Output (Read Only)
ADF	21	nvoUnitStatus.Fan_Output	Fan Output (Read Only)
BD	9	nvoUnitStatus.Mode	Unit Mode of Operation (Read Only)
BD	10	nvoUnitStatus.In_Alarm	Unit Alarm mode (Read Only)
ADF	22	nciPropBand	Heating/Cooling Prop Band Input (Read/Write)
ADF	23	nciRemoteSetptSpan	Warm/Cool Adjust Span (Read/Write)
ADF	24	nciRemoteSetptBias	Warm/Cool Adjust Offset Value (Read/Write)
ADF	27	nciTempOffset	Space or Zone Temperature Sensor Calibration Input (Read/Write)
ADF	32	nviSetpoint	General Setpoint Input (Read/Write)
ADF	39	nvoHtgFrzPro1Tmp	Heating Freeze Sensing Temperature Value (Read Only)
ADF	40	nvoHtgFrzSetpt	Heating Freeze Sensing Temperature Setpoint Value (Read Only)
ADF	41	nvoAlarms	Alarms Enumerated [0=no alarms, 1=condensate alarm, 2=Compressor Hi Discharge Pressure alarm, 3=Compressor low Suction Pressure alarm, 4=Freeze sensing alarm, 8=Faulty Freeze Sensor alarm, 9=Loss of Charge] (Read Only)
ADF	62	nvoPWMOut	ECM PWM Control signal value (Read Only)
ADF	65	nvoECMOvrd	ECM PWM Control signal Override (Read/Write)
ADF	63	nvoHumidity	Space Humidity value (Read Only)
ADF	66	nviAO2	Spare PWM Output AO2 Command (Write)
ADF	67	nvoAO2	Spare PWM Output AO2 Value (Read Only)
ADI	2	nciBypassTime	Temporary Occupancy Time Period Input (Read/Write)
BD	1	nvoEffectOccup	Effective Occupancy State (Read Only)
BD	2	nviOccManCmd	Occupancy Override Command Input (Read/Write)
BD	4	nviEmergOverride	Emergency Override Input (Read/Write)
BD	5	nvoFanStatus	Fan Output Status (Read Only)
BD	6	nvoAccStatus	Accessory 2 Output Status (Read Only)
BD	7	nvoLP_WVStatus	Accessory 1 Output Status (Read Only)
BD	8	nvoAlarmStatus	Alarm Output Status (Read Only)
BD	12	nviAlarmReset	Alarm Reset Input (Read/Write)
BD	13	nviFanSpeedCmd.State	Network equivelant of a thermostatic 'G' call. (Write)
BD	14	nviComprEnable.State	Network equivelant of a thermostatic 'Y1' call. (Write)
BD	46	nviY2HiSpeed.State	Network equivelant of a thermostatic 'Y2' call. (Write)
BD	18	nvoRV1Status	Reversing Valve Output Status (Read Only)
BD	22	nviOccSchedule.Current_s	Occupancy Supervisory Scheduler Command Input (Read/Write)
BD	25	nvoCompFanProv	Compressor/Fan Proving Switch Status (Read Only)
BD	24	nvoDirtyFilter	Dirty Filter Switch Status (Read Only)
BD	26	nvoComp2Status	Compressor Hi Capacity Command Status (Read Only)
BD	42	nviBO5	Command for output BO5 used for Emg Heat-Interlocked with Fan DP9Read/Write)
BD	41	nviBO9	Command for output BO9(Read/Write)
BD	47	nvoBO5	Value output for BO5 used for Emg Heat (Read Only)
BD	48	nvoBO9	Value output for BO9 (Read Only)
BD	44	nviDehumEna.State	Dehumidification command-like a Humidistat (Read/Write)

Envision Console Controls

LonWorks

LonWorks						Point Description
LonWorks Name	SNVT Type	SNVT Index	SCPT Reference	SCPT Index	UCPT Index	
nciSetpoints	SNVT_temp_setpt	106	SCPTsetPnts	60		Occupied Cooling Setpoint Input (Read/Write)
						Standby Cooling Setpoint Input (Read/Write)
						Unoccupied Cooling Setpoint Input (Read/Write)
						Occupied Heating Setpoint Input (Read/Write)
						Standby Heating Setpoint Input (Read/Write)
						Unoccupied Heating Setpoint Input (Read/Write)
nciMinClgSetpt	SNVT_temp_p	105			4	Minimum Cooling Setpoint Input (Read/Write)
nciMaxHtgSetpt	SNVT_temp_p	105			3	Maximum Heating Setpoint Input (Read/Write)
nvoSpaceTemp	SNVT_temp_p	105				Space or Zone Temperature Value (Read Only)
nvoDischAirTemp	SNVT_temp_p	105				Discharge Air Temp **Field Supplied Only** (Read Only)
nvoEffClgSetpt	SNVT_temp_p	105				Effective Cooling Setpoint Value (Read Only)
nviSpaceTemp	SNVT_temp_p	105				Space or Zone Temperature Value Override(Write)
nvoEffHtgSetpt	SNVT_temp_p	105				Effective Heating Setpoint Value (Read Only)
nciAux5LevP	SNVT_lev_percent	81				Dehumidification Setpoint (Read/Write)
nciAux1Temp	SNVT_temp_p	105			147	Heating Freeze Protection Temperature Setpoint Value (Read/Write)
nciAux2Temp	SNVT_temp_p	105			148	Heating Freeze Protection Temperature Setpoint Value (Read/Write)
nvoUnitStatus	SNVT_hvac_type	112				1st Stage Compressor Heating Output (Read Only)
						1st Stage Compressor Cooling Output (Read Only)
						Fan Output (Read Only)
						Unit Mode of Operation (Read Only)
						Unit Alarm mode (Read Only)
nciPropBand	SNVT_temp_diff_p	147			177	Heating/Cooling Prop Band Input (Read/Write)
nciRemoteSetptMin	SNVT_temp_diff_p	147			98	Warm/Cool Adjust Span (Read/Write)
nciRemoteSetptMax	SNVT_temp_diff_p	147			97	Warm/Cool Adjust Offset Value (Read/Write)
nciTempOffset	SNVT_temp_diff_p	147			11	Space or Zone Temperature Sensor Calibration Input (Read/Write)
nviSetpoint	SNVT_temp_p	105				General Setpoint Input (Read/Write)
nvoHtgFrzPro1Tmp	SNVT_temp_p	105				Heating Freeze Sensing Temperature Value (Read Only)
nvoHtgFrzSetpt	SNVT_temp_p	105				Heating Freeze Sensing Temperature Setpoint Value (Read Only)
nvoAlarms	SNVT_lev_cont	21				Alarms Enumerated [0=no alarms, 1=condensate alarm, 2=Compressor Hi Discharge Pressure alarm, 3=Compressor low Suction Pressure alarm, 4=Freeze sensing alarm, 8=Faulty Freeze Sensor alarm, 9=Loss of Charge] (Read Only)
nvoPWMOut	SNVT_volt	44				ECM PWM Control signal value (Read Only)
nvoECMOvrd	SNVT_volt	44				ECM PWM Control signal Override (Read/Write)
nvoHumidity	SNVT_volt	44				Space Humidity value (Read Only)
nviAO2	SNVT_lev_percent	81				Spare PWM Output AO2 Command (Write)
nvoAO2	SNVT_lev_percent	81				Spare PWM Output AO2 Value (Read Only)
nciBypassTime	SNVT_time_min	123	SCPTbypassTime	34		Temporary Occupancy Time Period Input (Read/Write)
nvoEffectOccup	SNVT_occupancy	109				Effective Occupancy State (Read Only)
nviOccManCmd	SNVT_occupancy	109				Occupancy Override Command Input (Read/Write)
nviEmergOverride	SNVT_hvac_emerg	103				Emergency Override Input (Read/Write)
nvoFanStatus	SNVT_lev_disc	22				Fan Output Status (Read Only)
nvoAccStatus	SNVT_lev_disc	22				Accessory 2 Output Status (Read Only)
nvoLP_WVStatus	SNVT_lev_disc	22				Accessory 1 Output Status (Read Only)
nvoAlarmStatus	SNVT_lev_disc	22				Alarm Output Status (Read Only)
nviAlarmReset	SNVT_lev_disc	22				Alarm Reset Input (Read/Write)
nviFanSpeedCmd.State	SNVT_switch	95				Network equivelant of a thermostatic 'G' call. (Write)
nviComprEnable.State	SNVT_switch	95				Network equivelant of a thermostatic 'Y1' call. (Write)
nviComprEnable.State	SNVT_switch	95				Network equivelant of a thermostatic 'Y2' call. (Write)
nvoRV1Status	SNVT_lev_disc	22				Reversing Valve Output Status (Read Only)
nviOccSchedule	SNVT_tod_event	128				Occupancy Supervisory Scheduler Command Input (Read/Write)
nvoCompFanProv	SNVT_lev_disc	22				Compressor/Fan Proving Switch Status (Read Only)
nvoDirtyFilter	SNVT_lev_disc	22				Dirty Filter Switch Status (Read Only)
nvoComp2Status	SNVT_lev_disc	22				Compressor Hi Capacity Command Status (Read Only)
nviBO5	SNVT_lev_disc	22				Command for output BO5 used for Emg Heat-Interlocked with Fan DP9Read/Write)
nviBO9	SNVT_lev_disc	22				Command for output BO9(Read/Write)
nvoBO5	SNVT_lev_disc	22				Value output for BO5 used for Emg Heat (Read Only)
nvoBO9	SNVT_lev_disc	22				Value output for BO9 (Read Only)
nviDehumEna.State	SNVT_lev_disc	22				Dehumidification command-like a Humidistat (Read/Write)

Envision Console Controls

BACNet

BACnet						Point Description
Object Identifier			Property		Full Reference	
Object Type	Type Enumeration	Instance	Name	Enumeration		
Analog Value	2	1	Present_Value	85	WFI##########.Occupied Cool.Present_Value	Occupied Cooling Setpoint Input (Read/Write)
						Standby Cooling Setpoint Input (Read/Write)
Analog Value	2	2	Present_Value	85	WFI##########.Unoccupied Cool.Present_Value	Unoccupied Cooling Setpoint Input (Read/Write)
Analog Value	2	3	Present_Value	85	WFI##########.Occupied Heat.Present_Value	Occupied Heating Setpoint Input (Read/Write)
						Standby Heating Setpoint Input (Read/Write)
Analog Value	2	4	Present_Value	85	WFI##########.Unoccupied Heat.Present_Value	Unoccupied Heating Setpoint Input (Read/Write)
						Minimum Cooling Setpoint Input (Read/Write)
						Maximum Heating Setpoint Input (Read/Write)
Analog Input	0	1	Present_Value	85	WFI##########.Space Temp.Present_Value	Space or Zone Temperature Value (Read Only)
Analog Input	0	2	Present_Value	85	WFI##########.Discharge Air Temp.Present_Value	Discharge Air Temp **Field Supplied Only** (Read Only)
Analog Input	0	3	Present_Value	85	WFI##########.Effective Clg Setpt.Present_Value	Effective Cooling Setpoint Value (Read Only)
Analog Output	1	4	Present_Value	85	WFI##########.Space temp Ovrd.Present_Value	Space or Zone Temperature Value Override(Write)
Analog Input	0	4	Present_Value	85	WFI##########.Effective Htg Setpt.Present_Value	Effective Heating Setpoint Value (Read Only)
Analog Value	2	9	Present_Value	85	WFI##########.Dehumidify Setpt.Present_Value	Dehumidification Setpoint (Read/Write)
Analog Value	2	10	Present_Value	85	WFI##########.Low Temp Limit Adj.Present_Value	Heating Freeze Protection Temperature Setpoint Value (Read/Write)
						Heating Freeze Protection Temperature Setpoint Value (Read/Write)
						1st Stage Compressor Heating Output (Read Only)
						1st Stage Compressor Cooling Output (Read Only)
						Fan Output (Read Only)
Multistate Input	13	2	Present_Value	85	WFI##########.Mode.Present_Value	Unit Mode of Operation (Read Only)
						Unit Alarm mode (Read Only)
						Heating/Cooling Prop Band Input (Read/Write)
Analog Value	2	6	Present_Value	85	WFI##########.Remote Setpt Span.Present_Value	Warm/Cool Adjust Span (Read/Write)
Analog Value	2	7	Present_Value	85	WFI##########.Remote Setpt Bias.Present_Value	Warm/Cool Adjust Offset Value (Read/Write)
Analog Value	2	8	Present_Value	85	WFI##########.Space Temp Offset.Present_Value	Space or Zone Temperature Sensor Calibration Input (Read/Write)
Analog Output	1	1	Present_Value	85	WFI##########.Space Setpoint.Present_Value	General Setpoint Input (Read/Write)
Analog Input	0	6	Present_Value	85	WFI##########.Water Coil Temp.Present_Value	Heating Freeze Sensing Temperature Value (Read Only)
Analog Input	0	7	Present_Value	85	WFI##########.Low Temp Limit.Present_Value	Heating Freeze Sensing Temperature Setpoint Value (Read Only)
Analog Input	0	9	Present_Value	85	WFI##########.Alarms Enumerated.Present_Value	Alarms Enumerated [0=no alarms, 1=condensate alarm, 2=Compressor Hi Discharge Pressure alarm, 3=Compressor low Suction Pressure alarm, 4=Freeze sensing alarm, 8=Faulty Freeze Sensor alarm, 9=Loss of Charge] (Read Only)
Analog Input	0	8	Present_Value	85	WFI##########.ECM Cmd Output.Present_Value	ECM PWM Control signal value (Read Only)
Analog Output	1	2	Present_Value	85	WFI##########.ECM Fan Ovrd.Present_Value	ECM PWM Control signal Override (Read/Write)
Analog Input	0	5	Present_Value	85	WFI##########.Space Humidity.Present_Value	Space Humidity value (Read Only)
Analog Output	1	3	Present_Value	85	WFI##########.AO2 Override.Present_Value	Spare PWM Output AO2 Command (Write)
Analog Input	0	10	Present_Value	85	WFI##########.AO2 Value.Present_Value	Spare PWM Output AO2 Value (Read Only)
Analog Value	2	5	Present_Value	85	WFI##########.Temporary Occ Time.Present_Value	Temporary Occupancy Time Period Input (Read/Write)
Multistate Input	13	1	Present_Value	85	WFI##########.Effective Occupancy.Present_Value	Effective Occupancy State (Read Only)
Multistate Output	14	1	Present_Value	85	WFI##########.Occupancy Command.Present_Value	Occupancy Override Command Input (Read/Write)
Multistate Output	14	6	Present_Value	85	WFI##########.Emergency Override.Present_Value	Emergency Override Input (Read/Write)
Binary Input	3	1	Present_Value	85	WFI##########.Fan Cmd Status.Present_Value	Fan Output Status (Read Only)
Binary Input	3	6	Present_Value	85	WFI##########.Accessory 2 Output.Present_Value	Accessory 2 Output Status (Read Only)
Binary Input	3	5	Present_Value	85	WFI##########.Accessory 1 Output.Present_Value	Accessory 1 Output Status (Read Only)
Binary Input	3	8	Present_Value	85	WFI##########.Alarm Status.Present_Value	Alarm Output Status (Read Only)
Multistate Output	14	7	Present_Value	85	WFI##########.Alarm Reset.Present_Value	Alarm Reset Input (Read/Write)
Multistate Output	14	2	Present_Value	85	WFI##########.Fan Command (G).Present_Value	Network equivelant of a thermostatic 'G' call. (Write)
Multistate Output	14	3	Present_Value	85	WFI##########.Compressor Cmd (Y1).Present_Value	Network equivelant of a thermostatic 'Y1' call. (Write)
Multistate Output	14	3	Present_Value	85	WFI##########.Compressor Cmd (Y2).Present_Value	Network equivelant of a thermostatic 'Y2' call. (Write)
Binary Input	3	4	Present_Value	85	WFI##########.Reversing Valve.Present_Value	Reversing Valve Output Status (Read Only)
						Occupancy Supervisory Scheduler Command Input (Read/Write)
						Compressor/Fan Proving Switch Status (Read Only)
Binary Input	3	7	Present_Value	85	WFI##########.Dirty Filter (BI-12).Present_Value	Dirty Filter Switch Status (Read Only)
Binary Input	3	3	Present_Value	85	WFI##########.Comp Hi Capacity Cmd.Present_Value	Compressor Hi Capacity Command Status (Read Only)
Multistate Output	14	8	Present_Value	85	WFI##########.Emergency Heat BO5.Present_Value	Command for output BO5 used for Emg Heat-Interlocked with Fan DP9Read/Write)
Multistate Output	14	9	Present_Value	85	WFI##########.BO9.Present_Value	Command for output BO9(Read/Write)
Binary Input	3	9	Present_Value	85	WFI##########.BO5 Output.Present_Value	Value output for BO5 used for Emg Heat (Read Only)
Binary Input	3	10	Present_Value	85	WFI##########.BO9 Output.Present_Value	Value output for BO9 (Read Only)
Multistate Output	14	10	Present_Value	85	WFI##########.Dehum Cmd.Present_Value	Dehumidification command-like a Humidistat (Read/Write)

Envision Console Controls

BACnet Variables

The variables will be listed with the point type and instance preceding the variable name.

Analog Input (Type 0)

0:1 **Space Temp**
[Read only, shows the space temperature]

0:2 **Discharge Air Temp**
[Read only, field mounted sensor unless supplied as a factory special]

0:3 **Effective Clg Setpt**
[Read only, shows the active cooling setpoint]

0:4 **Effective Htg Setpt**
[Read only, shows the active heating setpoint]

0:5 **Space Humidity**
[Read]

0:6 **Water Coil Temp**
[Read, shows the refrigerant temperature at its coldest, for predictive freeze condition detection]

0:7 **Low Temp Limit**
[Read, shows the water coil low temperature (freeze sensing) limit that will result in unit shutdown.]

0:8 **ECM Cmd Output**
[Read, shows the commanded speed (0-100%) of the ECM Blower]

0:9 **Alarms Enumerated**
[Read only, 0=no alarms, 1=condensate alarm, 2=Compressor Hi Discharge Pressure alarm, 3=Compressor low Suction Pressure alarm, 4=Freeze sensing alarm, 8=Faulty Freeze Sensor alarm, 9=Loss of Charge]

0:10 **AO2 Value**
[Read, shows the output value (0-100%) of AO2]

Analog Output (Type 1)

1:1 **Space Setpoint**
[Write, Raise and lower the heating and cooling setpoints from a single command point(volatile, reverts to 'uncommanded' after power outage).]

1:2 **ECM Fan Ovrd**
[Write, allows network direct control of the ECM blower speed (volatile, reverts to 'uncommanded' after power outage)]

1:3 **AO2 Override**
[Write, allows network direct control of the Analog Output 2, volatile, reverts to 'uncommanded' after power outage)]

1:4 **Space temp Ovrd**
[Write, allows the network to send space temperature values to the heat pump controller, volatile, these will supersede any temperature sensor connected to the space temperature Analog Input.]

Analog Value (Type 2)

2:1 **Occupied Cool**
[Write, Cooling setpoint in Occupied mode]

2:2 **Unoccupied Cool**
[Write, Cooling setpoint in Unoccupied mode]

2:3 **Occupied Heat**
[Write, Heating setpoint in Occupied mode]

2:4 **Unoccupied Heat**
[Write, Heating setpoint in Unoccupied mode]

2:5 **Temporary Occ Time**
[Write, set the duration of the temporary occupancy timer which is initiated by pressing the button on the zone sensor]

2:6 **Remote Setpt Span**
[Write, sets the offset range that the setpoint knob on the zone sensor may apply to the effective Htg/Clg setpoints]

2:7 **Remote Setpt Bias**
[Write, biases the entire readjust range of the remote setpoint adjust to allow zeroing from the network.]

2:8 **Space Temp Offset**
[Write, Adds an offset to the Space Temp value for calibration]

2:9 **Dehumidify Setpt**
[Write, sets the humidity value that will cause the heat pump to enter passive dehumidification]

2:10 **Low Temp Limit Adj**
[Write, sets the water coil low temperature (freeze sensing) limit for shutdown]

Binary Input (Type 3)

3:1 **Fan Cmd Status**
[Read, show the commanded condition of the Fan Output,Inactive=Off, Active=On]

3:2 **Comp Cmd Status**
[Read, show the commanded condition of the Compressor Output, Inactive=Off, Active=On]

3:3 **Comp Hi Capacity Cmd**
[Read, show the commanded condition of the 'Hi Capacity' Compressor control, Inactive=Off, Active=On.]

3:4 **Reversing Valve**
[Read, show the commanded condition of the Reversing Valve Output, Inactive =Heating, Active =Cooling]

3:5 **Accessory 1 Output**
[Read, Shows the commanded value of the X1 (Accessory

3:8 **Alarm Status**
[Read, shows the in alarm/out of alarm status, Inactive=Off, Active=On]

Envision Console Controls

BACnet Variables

3:9 **BO5 Output**
[Read, shows the BO5 (electric heat) output value, Inactive=Off, Active=On]

3:10 **BO9 Output**
[Read, shows the BO9 output value, Inactive=Off, Active=On]

Multistate Input (Type 13)

13:1 **Effective Occupancy**
[Read, show the prevailing occupancy status of the heatpump1=Occupied, 2=Unoccupied, 3=Bypass, 255=Invalid]

13:2 **Mode Status**
[Read, Shows unit status as Auto or Shutdown, 1=Auto, 7=Shutdown]

Multistate Output (Type 14)

14:1 **Occupancy Command**
[Write, Control the occupancy mode of the heatpump. 1=Occupied, 2=Unoccupied, 3=Bypass, 255=Invalid]

14:2 **Fan Command (G)**
[Write, allows a network command equivalent of a thermostatic ‘G’ call]

14:3 **Compressor Cmd (Y1)**
[Write, allows a network command equivalent of a thermostatic ‘Y1’ call]

14:4 **Compressor Cmd (Y2)**
[Write, allows a network command equivalent of a thermostatic ‘Y2’ call]

14:5 **Reversing Vlv Cmd (O)**
[Write, allows a network command equivalent of a thermostatic ‘O’ call]

14:6 **Emergency Overide**
[Write, provide rapid shutdown of the heatpump for fire,etc. 1=Normal, 5=Shutdown]

14:7 **Alarm Reset**
[Write, Reset lock-out ‘manual reset’ alarms. Alarm conditions must be cleared before a reset can succeed. This variable should be commanded ‘On’ for 20 seconds, then returned to the ‘Off’ condition. 1=Off, 2=On]

14:8 **Emergency Heat BO5**
[Write, allows a network command for emergency heat, also allows the network to stop automatic emergency heat.]

14:9 **BO9**
[Write, allow network control of spare output BO9. 1 = Off, 2=On.]

14:10 **Dehum Cmd**

Unit Startup Notes

Emergency Electric Resistance Heat

A factory-installed emergency electric heater package is available. Rated for 2,000 watts on models NC09 through NC12 and 3,000 watts on models NC15 through NC18. The heater package consists of ni-cad elements, ceramic insulators, and thermal limit switches. A concealed, chassis mounted rocker switch controls the heater mode operation and allows the field installation of an aquastat for boilerless unit operation.

Electrical Disconnect

Field installed on the optional chassis back plate, the console disconnect provides a permanent electrical connection to the main electrical supply branch. Wiring between the disconnect and the unit chassis is field supplied and allows the electrical power source to the chassis to be interrupted for unit servicing.

Non-Fused

Constructed of heavy gauge galvanized steel, the rocker style disconnect switch provides reliable electrical control. Wiring pigtails, using 12-gauge wires, are factory installed to simplify field wiring.

Fused

Similar in construction to the non-fused electrical disconnect. The fused disconnect is available in five models with equipment rated fuses to provide additional circuit protection. The fuses are panel mounted to allow easy inspection and removal without removing the cover on the disconnect.

CFD-10 - 10 amp rated fuse
CFD-12 - 12 amp rated fuse
CFD-15 - 15 amp rated fuse
CFD-20 - 20 amp rated fuse
CFD-25 - 25 amp rated fuse

Motorized Outside Air Damper

A field installed motorized outside air damper is available to allow the introduction of fresh air into the conditioned space through an outside vent. The damper motor is powered by 24 volts with a spring-close design in the event of a power failure. The damper blade and housing are constructed of aluminum for corrosion resistance and the blade includes a neoprene gasket to prevent air infiltration during off cycles. The damper assembly is installed on the optional chassis back plate and a two-wire low voltage connection simplifies wiring. A concealed, chassis mounted rocker switch allows the damper to be disabled

Hydronic Loop Controller for Boiler/Tower Installations

The hydronic loop controller is a microprocessor based control panel for control of water loop heat rejector (tower), heat supplier (boiler), and/or water well pumps and circulation pumps. Includes audible and visual alarms, temperature indication, and add-on options of low switches, remote alarm sensor wells and pump alternator.

Unit Startup Checklist / Unit Startup Steps

Before Powering Unit, Check The Following:

- High voltage is correct and matches nameplate.
- Fuses, breakers and wire size correct.
- Low voltage wiring complete.
- Piping completed and water system cleaned and flushed.
- Air is purged from closed loop system.
- Isolation valves are open, water control valves or loop pumps wired.
- Condensate line open and correctly pitched.
- Transformer switched to 208V if applicable.
- Dip switches are set correctly, if applicable.
- Blower rotates freely
- Air filter is clean and in position.
- Service/access panels are in place.
- Return air temperature is between 50-80ºF heating and 60-95ºF cooling.
- Check air coil cleanliness to insure optimum performance. Clean as needed according to maintenance guidelines. To obtain maximum performance the air coil should be cleaned before startup. A 10-percent solution of dishwasher detergent and water is recommended for both sides of coil, a thorough water rinse should follow.

Startup Steps

Note: Complete the Equipment Start-Up/Commissioning Check Sheet during this procedure. Refer to thermostat operating instructions and complete the startup procedure.

1. Initiate a control signal to energize the blower motor. Check blower operation.
2. Initiate a control signal to place the unit in the cooling mode. Cooling setpoint must be set below room temperature.
3. Be sure that the compressor and water control valve or loop pump(s) are activated.
4. Verify that the water flow rate is correct by measuring the pressure drop through the heat exchanger using the P/T plugs and comparing to unit capacity data in specification catalog.
5. Check the temperature of both the supply and discharge water (Refer to Unit Operating Parameters tables).
6. Check for an air temperature drop of 15°F to 25°F across the air coil, depending on the fan speed and entering water temperature.
7. Adjust the cooling setpoint above the room temperature and verify that the compressor and water valve or loop pumps deactivate.
8. Initiate a control signal to place the unit in the heating mode. Heating set point must be set above room temperature.
9. Check the temperature of both the supply and discharge water (Refer to Unit Operating Parameters tables).
10. Check for an air temperature rise of 20°F to 35°F across the air coil, depending on the fan speed and entering water temperature.
11. Adjust the heating setpoint below room temperature and verify that the compressor and water valve or loop pump deactivate.
12. During all testing, check for excessive vibration, noise or water leaks. Correct or repair as required.
13. Set system to desired normal operating mode and set temperature to maintain desired comfort level.
14. Instruct the owner/operator in the proper operation of the thermostat and system maintenance.

Note: Be certain to fill out and forward all warranty registration papers.

Unit Operating Parameters

Single Speed Models

Entering Water Temp °F	Water Flow GPM/Ton	Cooling					
		Suction Pressure PSIG	Discharge Pressure PSIG	09-18 Superheat	09-18 Subcooling	Water Temp Rise °F	Air Temp Drop °F DB
50	1.5	127 - 144	205 - 225	5 - 10	10 - 14	18 - 22	18 - 22
	3.0	120 - 140	185 - 205	7 - 15	5 - 10	8 - 10	18 - 22
70	1.5	139 - 154	280 - 300	8 - 11	8 -12	18 - 22	18 - 22
	3.0	137 - 152	250 - 270	9 - 12	7 - 11	8 - 10	18 - 22
90	1.5	143 - 158	360 - 380	8 - 11	9 - 13	18 - 22	16 - 20
	3.0	141 - 156	330 - 350	9 - 12	8 - 12	8 - 10	16 - 20

Entering Water Temp °F	Water Flow GPM/Ton	Heating					
		Suction Pressure PSIG	Discharge Pressure PSIG	09-18 Superheat	09-18 Subcooling	Water Temp Drop °F	Air Temp Rise °F DB
30	1.5	73 - 79	279 - 304	7 - 13	2 - 6	7 -10	18 - 24
	3.0	79 - 85	285 - 310	8 - 14	2 - 6	3 - 6	20 - 26
50	1.5	103 - 109	308 - 333	8 - 12	4 - 8	8 - 11	20 - 26
	3.0	110 - 116	315 - 340	9 - 13	4 - 8	4 - 7	22 - 28
70	1.5	140 - 146	330 - 365	10 - 14	7 - 11	11 - 14	26 - 32
	3.0	146 - 153	340 - 375	10 - 14	7 - 11	7 - 10	28 - 34

Note: Cooling performance based on entering air temperatures of 80º F DB, 67º F WB.
Heating performance based on entering air temperature of 70º F DB.

Unit Operating Limits

Operating Limits	Cooling		Heating	
	(°F)	(°C)	(°F)	(°C)
Air Limits				
Min. Ambient Air	45	7.2	45	7.2
Rated Ambient Air	80	26.7	70	21.1
Max. Ambient Air	100	37.8	85	29.4
Min. Entering Air	50	10.0	40	4.4
Rated Entering Air db/wb	80.6/66.2	27/19	68	20.0
Max. Entering Air db/wb	110/83	43/28.3	80	26.7
Water Limits				
Min. Entering Water	30	-1.1	20	-6.7
Normal Entering Water	50-110	10-43.3	30-70	-1.1
Max. Entering Water	120	48.9	90	32.2

Notes:

Minimum/maximum limits are only for start-up conditions, and are meant for bringing the space up to occupancy temperature. Units are not designed to operate at the minimum/maximum conditions on a regular basis. The operating limits are dependant upon three primary factors: 1) water temperature, 2) return air temperature, and 3) ambient temperature. When any of the factors are at the minimum or maximum levels, the other two factors must be at the normal level for proper and reliable unit operation.

DEALER: _____

PHONE #: _____ DATE: _____

PROBLEM: _____

MODEL #: _____

SERIAL #: _____

WaterFurnace® Smarter from the Ground Up™

Startup/Troubleshooting Form

COOLING CYCLE ANALYSIS

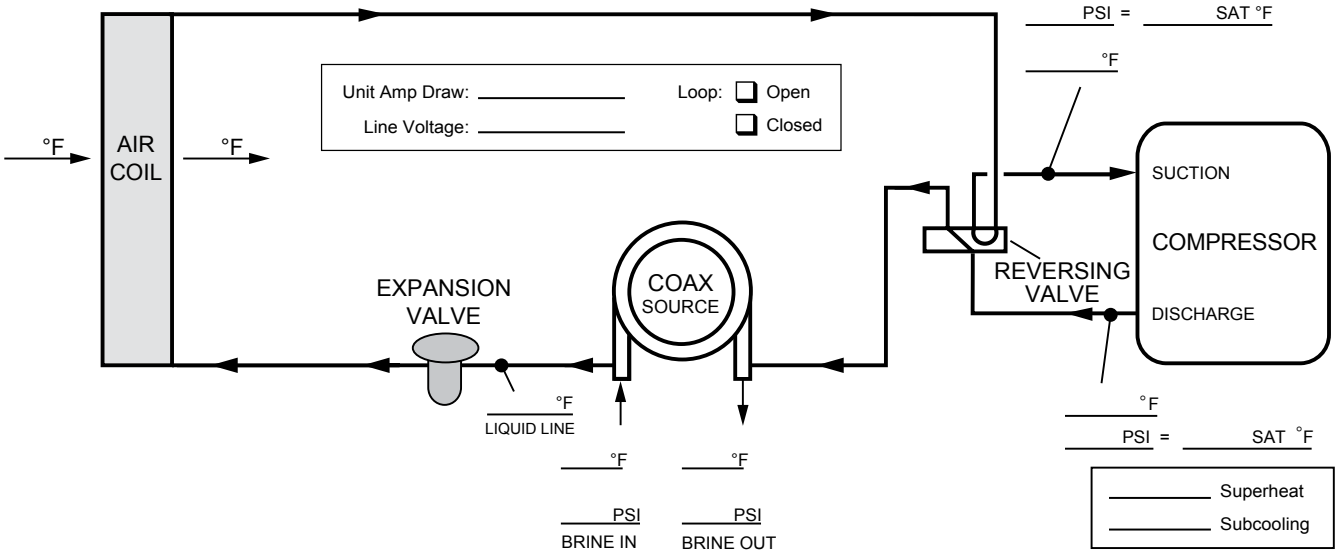

Heat of Extraction/Rejection = GPM x 500 (485 for water/antifreeze) x ΔT

Note: DO NOT hook up pressure gauges unless there appears to be a performance problem.

HEATING CYCLE ANALYSIS

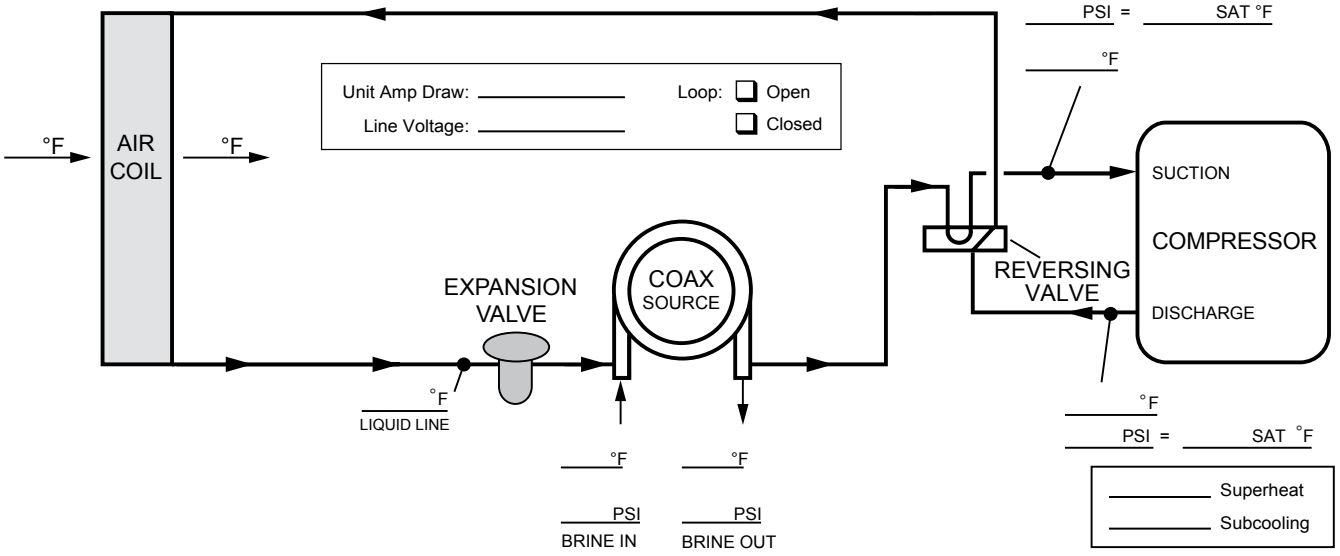

Pressure Drop

Model	GPM	Pressure Drop (psi)				
		30°F	50°F	70°F	90°F	110°F
09	1.2	1.0	0.9	0.8	0.7	0.6
	1.8	2.3	2.2	2.0	1.9	1.8
	2.5	3.8	3.7	3.5	3.3	3.1
12	1.5	0.9	0.8	0.7	0.6	0.5
	2.3	1.7	1.5	1.4	1.3	1.1
	3.5	3.0	2.7	2.5	2.4	2.2
15	2.0	1.7	1.6	1.5	1.4	1.3
	3.0	3.3	3.2	3.0	2.9	2.8
	4.5	5.7	5.5	5.3	5.1	4.9
18	3.0	1.7	1.6	1.5	1.4	1.3
	4.0	4.1	4.0	3.9	3.7	3.6
	5.5	7.9	7.6	7.4	7.2	6.9

3/4/08

Preventive Maintenance

Water Coil Maintenance

1. Keep all air out of the water. An open loop system should be checked to ensure that the well head is not allowing air to infiltrate the water line. Lines should always be airtight.
2. Keep the system under pressure at all times. It is recommended in open loop systems that the water control valve be placed in the discharge line to prevent loss of pressure during off cycles. Closed loop systems must have positive static pressure.

Note: On open loop systems, if the installation is in an area with a known high mineral content (125 PPM or greater) in the water, it is best to establish with the owner a periodic maintenance schedule so the coil can be checked regularly. Should periodic coil cleaning be necessary, use standard coil cleaning procedures which are compatible with either the cupronickel or copper water lines. Generally, the more water flowing through the unit the less chance for scaling.

Other Maintenance

Filters

Filters must be clean to obtain maximum performance. They should be inspected monthly under normal operating conditions and be replaced when necessary. Units should never be operated without a filter.

Condensate Drain

In areas where airborne bacteria produce a slime in the drain pan, it may be necessary to treat chemically to minimize the problem. The condensate drain can pick up lint and dirt, especially with dirty filters. Inspect twice a year to avoid the possibility of overflow.

Blower Motors

Blower motors are equipped with sealed ball bearings and require no periodic oiling.

Air Coil

The air coil must be cleaned to obtain maximum performance. Check once a year under normal operating conditions and, if dirty, brush or vacuum (with a brush attachment) clean. Care must be taken not to damage the aluminum fins while cleaning.

CAUTION: Fin edges are sharp.

Replacement Procedures

Obtaining Parts

When ordering service or replacement parts, refer to the model number and serial number of the unit as stamped on the serial plate attached to the unit. If replacement parts are required, mention the date of installation of the unit and the date of failure, along with an explanation of the malfunctions and a description of the replacement parts required.

In-Warranty Material Return

Material may not be returned except by permission of authorized warranty personnel. Contact your local distributor for warranty return authorization and assistance.

Manufactured by
WaterFurnace International, Inc.
9000 Conservation Way
Fort Wayne, IN 46809
www.waterfurnace.com

Product:	**Envision Series Console**
Type:	Geothermal/Water Source Heat Pumps
Size:	0.75-1.5 Ton
Document:	Installation Manual

IM1609 10/08

WaterFurnace International, Inc., 9000 Conservation Way, Fort Wayne, IN 46809-9794. WaterFurnace has a policy of continual product research and development and reserves the right to change design and specifications without notice. © 2008 WaterFurnace International Inc.